2006 & 2007 G/H Full-Size Van Electrical

Overview

ORGANIZATION

This document will be updated only to reflect a major subsystem change until the next platform major electrical redesign. This document is believed to be correct until the next platform major design change. This document is organized as follows;

- Systems Operation – How it works — *Not available at time of publication*.
- Component Locator – Where it is
- Connectors & Pinouts – What it looks like, — *Not available at time of publication*, and finally,
- Subsystem Schematics – Detailed wiring and electrical schematic information.

WHAT'S NEW FOR THE 2006 & 2007 FULL SIZE VANS

- The (LLY) Diesel Engine has been added as an available option.
- (UF3) Hi Idle is now an available option with the Diesel Engine only.
- The 2006 & 2007 manual includes detailed schematics for every subsystem in the vehicle.
- The (UF3) Hi Idle schematics are included in the LLY Powertrain Controls Subsystem.
- Schematic Description and Navigation instructions have been added at the beginning of Section D. This document helps you understand how the schematics are organized and how to read them.

Navigation

The Table of Contents and Index items are linked to the actual page. Click on the item of interest and you'll go to the corresponding page. You can return with the "previous page" arrow in the upper center of the screen. Other links embedded in the document are hi-lighted in blue.

Viewing

The size (%) control is located in the lower left corner of the screen. Click the down arrow and select "fit in window" (62%) or "actual size" (100%) for most viewing applications. You can zoom in schematic detail by selecting a larger percentage.

Printing

Specific pages can be printed out. Be careful to select a print range or "current page" or all 116 pages will try to print out.

Information provided is believed to be accurate at the time of publication. GM reserves the right to change the information at any time.

Index

SYSTEM OPERATION INSTRUCTIONS

Not Available At Time of Publication A-1

ELECTRICAL COMPONENT LOCATIONS

Power Distribution Centers:

Underhood BEC (Fuse Center) Label B-1
Top View B-2
Gas B-3
Diesel B-5
Location B-7
Body Fuse Block – Label B-8
Top View B-9
Description B-10
Location B-11

CONNECTOR AND PIN-OUT ILLUSTRATIONS

Not Available At Time of Publication C-1

SUBSYSTEM ELECTRICAL SCHEMATICS

Schematic Description and Navigation Instructions **D-1**
Power Distribution (UH BEC) D-3
Power Moding D-10
Power Distribution (Body BEC) D-11
Ground Distribution D-16
Powertrain Controls (V6 PCM) D-23
(Diesel LLY V8) D-33

SUBSYSTEM ELECTRICAL SCHEMATICS *(Continued)*

Fuel D-46
LCT Transmission (LLY & T42) D-47
Charging & Energy Storage (BASE) D-49
Charging & Energy Storage (LLY DIESEL) D-50
Stepper Motor Cruise Control (SMCC) D-51
Horns D-52
Brakes (ABS) D-53
Vses W/ ABS D-54
Occupant Protection D-58
Automatic Occupant Suppression D-61
Serial Data (Class 2) D-62
Truck Body Controller D-64
Heating & Cooling (HVAC) D-66
Instrument Panel Cluster (Displays) D-72
Wipers D-73
Exterior Lighting D-74
Power Windows D-77
Entry Control D-78
Power Seats D-80
Mirrors D-81
Audio (Speakers) D-83
Steering Column Controls (Stalk Switch) D-86
Entertainment (OnStar) D-87
Special Equipment Options – 5G4 – Roof Mounted Lamp D-88
Special Equipment Options D-89
Special Equipment Options – 8A2 – Dual Batteries D-90
– 8J0 – Cooling Fan D-91

SUBSYSTEM ELECTRICAL SCHEMATICS *(Continued)*

Special Equipment Options – 8S3 – Backup Alarm D-92
– 8S8 – Odo Security D-93
– 9B9, 9B4 – Road Speed Governor D-94
– 9L0 – Computer Screen Blanking D-95
– &9L4 – Mobile Radio D-96
Master System D-97

System Operating Instructions

Not Available At Time of Publication

2006 & 2007 G/H FULL-SIZE VAN ELECTRICAL

Power Distribution Centers: Underhood BEC (Fuse Center) Label

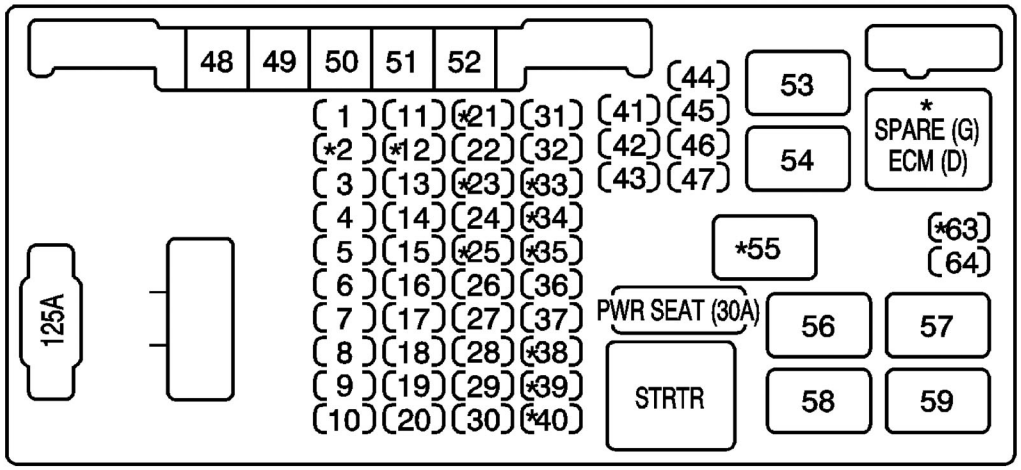

MINI FUSES
MINI-FUSIBLES

1 -RDO BATT (15A)
* 2 -PCM BATT (G) (20A)
FOH/ECM/TCM BATT (D) (20A)
3 -LT REAR STOP/TRN (10A)
4 -RT REAR STOP/TRN (10A)
5 -TRLR BCK/UP (10A)
6 -IGN O (10A)
7 -STOP LAMP (15A)
8 -REAR DEF/HTD MIR (20A)
9 -RT DRL/TRN (10A)
10 -LT DRL/TRN (10A)
11 -TBC 4 (15A)
*12-FUEL PMP (G) (20A)
FUEL PMP (D) (15A)
13-TRLR (30A)
14-HAZRD (15A)
15-HORN (15A)
16-TBC 3 (15A)
17-TRLR STOP/TRN (15A)
18-TBC 2 (15A)
19-TBC (10A)
20-RFA (10A)
*21-ENG 2 (G) (10A)
SPARE (D)
22-IGN E (10A)
*23-ENG 1 (G) (15A)
ENG 1 (D) (10A)
24-TBC IGN 1 (10A)
*25-SPARE (G)
FUEL HTR (D) (20A)
26-ISRVM (10A)
27-CRNK (10A)
28-BTSI (10A)
29-AUX PWR (20A)
30-LTR (15A)
31-IPC (10A)
32-A/C (10A)
*33-SPARE (G)
ECM (D) (30A)
*34-CNSTR VENT SOL (G) (10A)
REAR FOG LMPS (D) (10A)
*35-SPARE (G)
SPARE (D)
36-BTSI BCK/UP (15A)
37-AIRBAG (10A)
*38-PCM IGN 1 (G) (15A)
ECM/TCM/GLOW PLUG
CNTRL MDL IGN 1 (D) (10A)
*39-02 SNSR B (G) (15A)
SPARE (D)
*40-02 SNSR A (G) (15A)
SPARE (D)
41-WSW (15A)
42-RT-LO BEAM (10A)
43-LT-LO BEAM (10A)
44-LT-HI BEAM (10A)
45-RT-HI BEAM (10A)
*46-TBC ACCY (G) (10A)
TBC/TCM/ACCY (D) (10A)
47-FRT WPR (25A)
*63-SPARE (G)
ECM ACT (D) (10A)
64-SPARE

MICRO RELAYS
MICRORELAIS

53-WSW
54-A/C
*55-SPARE (G)
REAR FOG LMPS (D)
56-LAMP-HI BEAM
57-FUEL PMP
58-LAMP-LO BEAM
59-HORN

J-CASE FUSES
FUSIBLES JCASE

48-ABS/VSES(60A)
49-IGN A (40A)
50-TRLR (30A)
51-BLWR (40A)
52-IGN B (40A)

*NOTE: The function and amperage of these fuses are different, depending on vehicle content.
(G) = GAS
(D) = DIESEL
REMARQUE: La fonction et l'intensité de ces fusibles diffèrent suivant l'équipement du véhicule.
(G) = ESSENCE
(D) = DIESEL

2006 & 2007 G/H Full-Size Van Electrical

Power Distribution Centers: Underhood BEC (Fuse Center) Top View

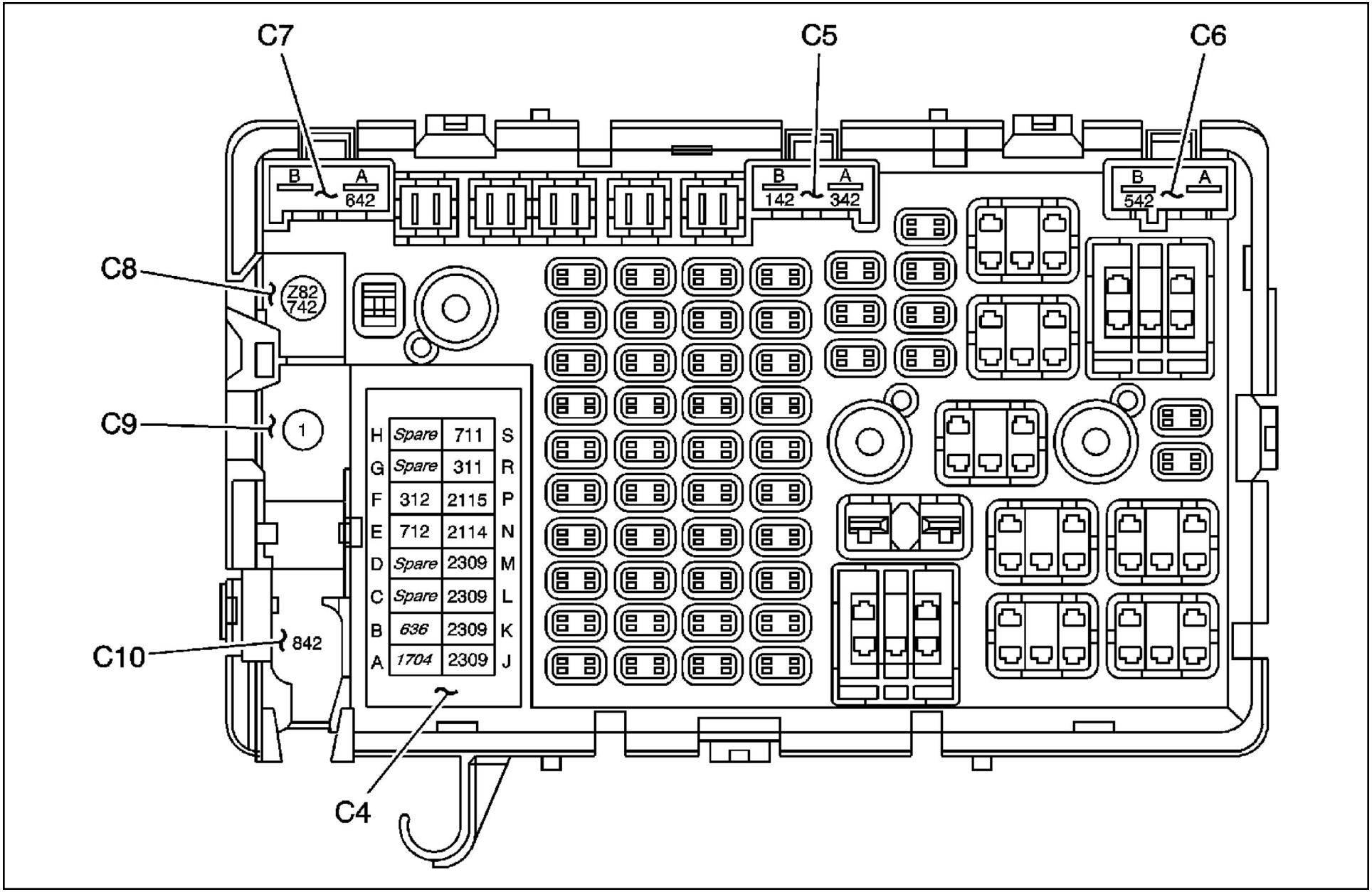

Power Distribution Centers: Underhood BEC (Fuse Center) Gas

No.	Device	Rating	Description
1	RDO BATT Fuse	15A	Radio (w/o UL5) or Chime Module (UL5)
2	PCM BATT Fuse	20A	Powertrain Control Module (PCM)
3	LT REAR STOP/TRN Fuse	10A	Trailer Stop/Turn Relay - Left (UF7) or C405 (Cutaway)
4	RT REAR STOP/TRN Fuse	10A	Trailer Stop/Turn Relay - Right (UF7) or C405 (Cutaway)
5	TRLR BCK/UP Fuse	10A	Trailer Wiring Harness (UY7) or C405 (Cutaway)
6	IGN 0 Fuse	10A	Powertrain Control Module (PCM), Body Control Module (BCM), Automatic Transmission
7	STOP LAMP Fuse	15A	Stop Lamp Switch
8	REAR DEF/HTD MIR Fuse	20A	HVAC Control Assembly (C49/DE5/DE7)
9	RT DRL/TRN Fuse	10A	Park/Turn Signal Lamp - RF
10	LT DRL/TRN Fuse	10A	Park/Turn Signal Lamp - LF
11	TBC 4 Fuse	15A	Body Control Module (BCM)
12	FUEL PMP Fuse	20A	FUEL PMP Relay
13	TRLR Fuse (UY7)	30A	Trailer Wiring Harness
14	HAZRD Fuse	15A	Turn Signal/Hazard Flasher Module
15	HORN Fuse	15A	HORN Relay
16	TBC 3 Fuse	15A	Body Control Module (BCM)
17	TRLR STOP/TRN Fuse (UY7)	15A	Trailer Stop/Turn Relay - Left and Trailer Stop/Turn Relay - Right
18	TBC 2 Fuse	15A	Body Control Module (BCM)
19	TBC Fuse	10A	Body Control Module (BCM)
20	RFA Fuse	10A	Remote Control Door Lock Receiver (RCDLR)
21	ENG 2 Fuse	10A	Even Fuel Injectors and Even Ignition Coils (4.8L/5.3L/6.0L) or Even Fuel Injectors and Ignition Coil (4.3L)
22	IGN E Fuse	10A	Stop Lamp Switch and A/C Relay
23	ENG 1 Fuse	15A	Odd Fuel Injectors, Odd Ignition Coils, EVAP Canister Purge Solenoid Valve, MAF/IAT Sensor, PNP Switch (4.8L/5.3L/6.0L) or Odd Fuel Injectors, Ignition Control Module, EVAP Canister Purge Solenoid Valve, MAF/IAT Sensor, PNP Switch (4.3L)
24	TBC IGN 1 Fuse	10A	Body Control Module (BCM)
25	SPARE Fuse	—	Not Used
26	ISRVM Fuse	10A	Inside Rearview Mirror (DF5)
27	CRNK Fuse	10A	Powertrain Control Module (PCM)
28	BTSI Fuse	10A	Stop Lamp Switch
29	AUX PWR Fuse	20A	Auxiliary Power Outlet 2
30	LTR Fuse	15A	Cigar Lighter/Auxiliary Power Outlet 1 and Data Link Connector (DLC)
31	IPC Fuse	10A	Instrument Panel Cluster (IPC)
32	A/C Fuse	10A	A/C Relay
33	SPARE Fuse	—	Not Used
34	CNSTR VENT SOL Fuse	10A	EVAP Canister Vent Solenoid Valve and SPARE Relay

(continued on next page)

Power Distribution Centers: Underhood BEC (Fuse Center) Gas *(continued)*

No.	Device	Rating	Description
35	SPARE Fuse	—	Not Used
36	BTSI BCK/UP Fuse	15A	Park/Neutral Position (PNP) Switch
37	AIRBAG Fuse	10A	PPS Module and Inflatable Restraint PASSENGER AIR BAG ON/OFF Indicator (Light Duty w/o YF7), Inflatable Restraint I/P Module Disable Switch (Heavy Duty), SDM
38	PCM IGN 1 Fuse	15A	Powertrain Control Module (PCM), Cruise Control Module (CCM) - w/o JL4 or Throttle Actuator Control (TAC) Module and Steering Wheel Speed/Position Sensor - JL4
39	O2 SNSR B Fuse	15A	HO2S Bank 1 Sensor 2 and Bank 2 Sensor 2
40	O2 SNSR A Fuse	15A	HO2S Bank 1 Sensor 1 and Bank 2 Sensor 1
41	WSW Fuse	15A	WSW Relay
42	RT-LO BEAM Fuse	10A	Headlamp Low Beam - Right (Composite) or Headlamp - Right (Sealed)
43	LT-LO BEAM Fuse	10A	Headlamp Low Beam - Left (Composite) or Headlamp - Left (Sealed)
44	LT-HI BEAM Fuse	10A	Headlamp High Beam - Left (Composite) or Headlamp - Left (Sealed)
45	RT-HI BEAM Fuse	10A	Headlamp High Beam - Right (Composite) or Headlamp - Right (Sealed)
46	TBC ACCY Fuse	10A	Body Control Module (BCM)
47	FRT WPR Fuse	25A	Windshield Wiper Motor
48	ABS/VSES Fuse	60A	Electronic Brake Control Module (EBCM)
49	IGN A Fuse	40A	STRTR Relay and Ignition Switch
50	TRLR Fuse (UY7)	30A	Trailer Wiring Harness
51	BLWR Fuse	40A	Blower Motor Resistor Assembly
52	IGN B Fuse	40A	Ignition Switch
53	WSW Relay	—	Windshield Wiper Motor
54	A/C Relay	—	A/C Compressor Clutch
55	SPARE Relay	—	Not Used
56	LAMP-HI BEAM Relay	—	RT-HI BEAM and LT-HI BEAM Fuses
57	FUEL PMP Relay	—	Fuel Pump
58	LAMP-LO BEAM Relay	—	RT-LO BEAM and LT-LO BEAM Fuses
59	HORN Relay	—	Horn Assembly
60	PWR SEAT Circuit Breaker	30A	Seat Adjuster Switch - Driver (AG1) and Seat Adjuster Switch - Passenger (AG2)
61	STRTR Relay	—	Starter
62	SPARE Relay	—	Not Used
63	SPARE Fuse	—	Not Used
64	SPARE Fuse	—	Not Used
65	125A Fuse	125A	Fuse Block - Body

Power Distribution Centers: Underhood BEC (Fuse Center) Diesel

No.	Device	Rating	Description
1	RDO BATT Fuse	15A	Radio (w/o UL5) or Chime Module (UL5)
2	FOH/ECM/TCM BATT Fuse	20A	Engine Control Module (ECM), Transmission Control Module (TCM), Coolant Heater (K08)
3	LT REAR STOP/TRN Fuse	10A	Trailer Stop/Turn Relay - Left (UY7) or C405 (Cutaway)
4	RT REAR STOP/TRN Fuse	10A	Trailer Stop/Turn Relay - Right (UY7) or C405 (Cutaway)
5	TRLR BCK/UP Fuse	10A	Trailer Wiring Harness (UY7) or C405 (Cutaway)
6	IGN 0 Fuse	10A	Engine Control Module (ECM), Body Control Module (BCM), Automatic Transmission, Glow Plug Control Module (GPCM)
7	STOP LAMP Fuse	15A	Stop Lamp Switch
8	REAR DEF/HTD MIR Fuse	20A	HVAC Control Assembly (C49/DE5/DE7)
9	RT DRL/TRN Fuse	10A	Park/Turn Signal Lamp - RF
10	LT DRL/TRN Fuse	10A	Park/Turn Signal Lamp - LF
11	TBC 4 Fuse	15A	Body Control Module (BCM)
12	FUEL PMP Fuse	15A	FUEL PMP Relay
13	TRLR Fuse (UY7)	30A	Trailer Wiring Harness
14	HAZRD Fuse	15A	Turn Signal/Hazard Flasher Module
15	HORN Fuse	15A	HORN Relay
16	TBC 3 Fuse	15A	Body Control Module (BCM)
17	TRLR STOP/TRN Fuse (UY7)	15A	Trailer Stop/Turn Relay - Left and Trailer Stop/Turn Relay - Right
18	TBC 2 Fuse	15A	Body Control Module (BCM)
19	TBC Fuse	10A	Body Control Module (BCM)
20	RFA Fuse	10A	Remote Control Door Lock Receiver (RCDLR)
21	SPARE Fuse	—	Not Used
22	IGN E Fuse	10A	Stop Lamp Switch and A/C Relay
23	ENG 1 Fuse	10A	MAF/IAT Sensor and PNP Switch
24	TBC IGN 1 Fuse	10A	Body Control Module (BCM)
25	FUEL HTR Fuse	20A	Fuel Heater
26	ISRVM Fuse	10A	Inside Rearview Mirror (DF5)
27	CRNK Fuse	10A	Engine Control Module (ECM)
28	BTSI Fuse	10A	Stop Lamp Switch
29	AUX PWR Fuse	20A	Auxiliary Power Outlet 2
30	LTR Fuse	15A	Cigar Lighter/Auxiliary Power Outlet 1 and Data Link Connector (DLC)
31	IPC Fuse	10A	Instrument Panel Cluster (IPC)
32	A/C Fuse	10A	A/C Relay
33	ECM Fuse	30A	ECM Relay
34	REAR FOG LMPS Fuse (T79)	10A	REAR FOG LMPS Relay
35	SPARE Fuse	—	Not Used

(continued on next page)

Power Distribution Centers: Underhood BEC (Fuse Center) Diesel *(continued)*

No.	Device	Rating	Description
36	BTSI BCK/UP Fuse	15A	Park/Neutral Position (PNP) Switch
37	AIRBAG Fuse	10A	Inflatable Restraint I/P Module Disable Switch and SDM
38	ECM/TCM/GLOW PLUG CNTRL MDL IGN 1 Fuse	10A	Engine Control Module (ECM), Glow Plug Control Module (GPCM), Transmission Control Module (TCM)
39	SPARE Fuse	—	Not Used
40	SPARE Fuse	—	Not Used
41	WSW Fuse	15A	WSW Relay
42	RT-LO BEAM Fuse	10A	Headlamp Low Beam Right (Composite) or Headlamp - Right (Sealed)
43	LT-LO BEAM Fuse	10A	Headlamp Low Beam Left (Composite) or Headlamp - Left (Sealed)
44	LT-HI BEAM Fuse	10A	Headlamp High Beam Left (Composite) or Headlamp - Left (Sealed)
45	RT-HI BEAM Fuse	10A	Headlamp High Beam Right (Composite) or Headlamp - Right (Sealed)
46	TBC/TCM ACCY Fuse	10A	Body Control Module (BCM) and Transmission Control Module (TCM)
47	FRT WPR Fuse	25A	Windshield Wiper Motor
48	ABS/VSES Fuse	60A	Electronic Brake Control Module (EBCM)
49	IGN A Fuse	40A	STRTR Relay and Ignition Switch
50	TRLR Fuse (UY7)	30A	Trailer Wiring Harness
51	BLWR Fuse	40A	Blower Motor Resistor Assembly
52	IGN B Fuse	40A	Ignition Switch
53	WSW Relay	—	Windshield Wiper Motor
54	A/C Relay	—	A/C Compressor Clutch
55	REAR FOG LMPS Relay (T79)	—	Rear Fog Lamps
56	LAMP-HI BEAM Relay	—	RT-HI BEAM and LT-HI BEAM Fuses
57	FUEL PMP Relay	—	Fuel Prime Pump
58	LAMP-LO BEAM Relay	—	RT-LO BEAM and LT-LO BEAM Fuses
59	HORN Relay	—	Horn Assembly
60	PWR SEAT Circuit Breaker	30A	Seat Adjuster Switch - Driver (AG1) and Seat Adjuster Switch - Passenger (AG2)
61	STRTR Relay	—	Starter
62	ECM Relay	—	ECM ACT Fuse and Engine Control Module (ECM)
63	ECM ACT Fuse	10A	Engine Control Module (ECM)
64	SPARE Fuse	—	Not Used
65	125A Fuse	125A	Fuse Block - Body

Power Distribution Centers: Underhood BEC (Fuse Center) Location

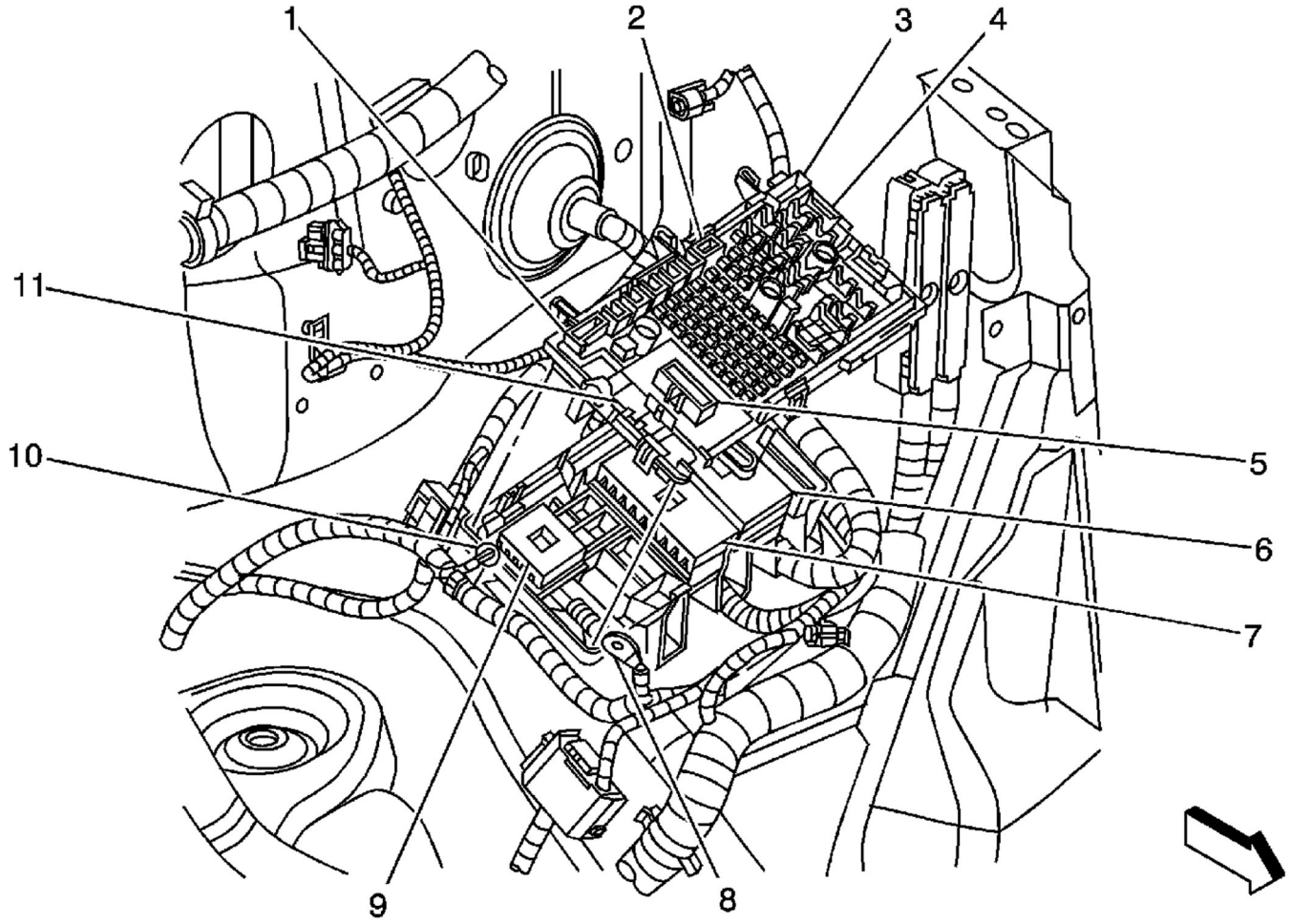

(1) Fuse Block Underhood – C7
(2) Fuse Block Underhood – C5
(3) Fuse Block Underhood – C6
(4) Fuse Block Underhood
(5) Fuse Block Underhood – C4
(6) Fuse Block Underhood – C1
(7) Fuse Block Underhood – C2
(8) Fuse Block Underhood – C10
(9) Fuse Block Underhood – C3
(10) Fuse Block Underhood – C8 (UY7)
(11) Fuse Block Underhood – C9

Power Distribution Centers: Body Fuse Block – Label

MINI FUSE

1	– SPARE	
2	– OSRVM	(10A)
3	– CSTY LAMP/SEO	(15A)
4	– LT REAR STOP/TRN	(10A)
5	– REAR DR LCKS	(10A)
6	– RT REAR STOP/TRN	(10A)
7	– DR LCKS	(10A)
8	– STOP/CHMSL	(10A)
9	– HVAC 1	(10A)
10	– HVAC	(20A)
11	– BRK	(10A)
12	– HTD MIR/DEFOG	(30A)
13	– REAR BLWR	(30A)
14	– DRV PWR TRN MIR	(10A)
15	– DR/LCK	(20A)
16	– UPFTR PRK LAMPS	(10A)
17	–	
18	– LT REAR PRK	(10A)
19	– PASS TRN MIR	(10A)
20	– RT REAR PRK	(10A)
21	– TRLR PRK	(15A)
22	– FRT PRK	(10A)

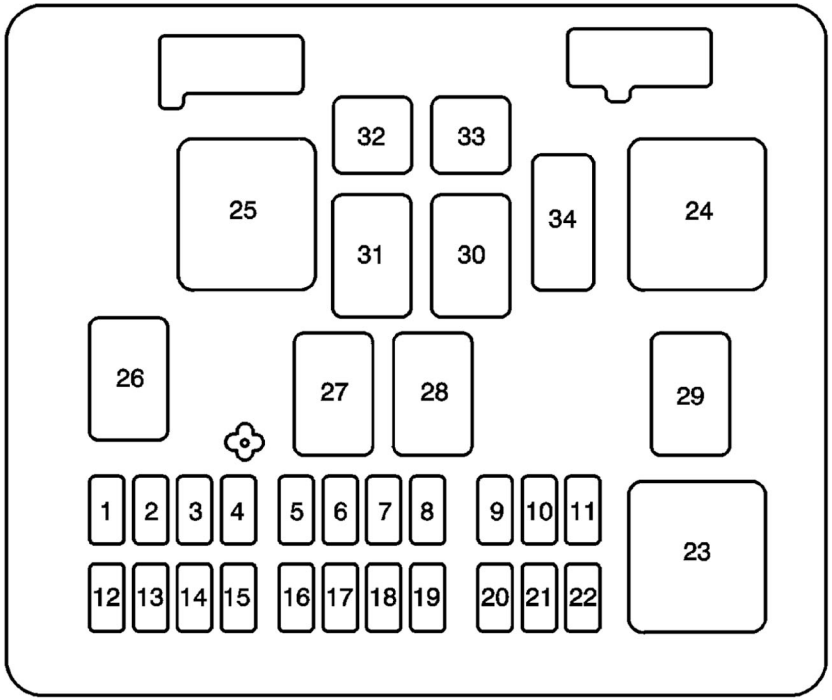

J–CASE FUSE

32 – AUX 1	(50A OR 60A)
33 – AUX 2	(50A OR 20A)

MICRO RELAY

26 – CTSY LAMP
27 – CARGO UNLCK
28 – DRV UNLCK
29 – PARK LAMP
30 – DR/LCKS
31 – PASS UNLCK

HIGH CURRENT RELAY

24 – AUX

CIRCUIT BREAKER

34 – PWR WNDW

MINI RELAY

23 – RAP
25 – REAR DEFOG

Power Distribution Centers: Body Fuse Block – Top View

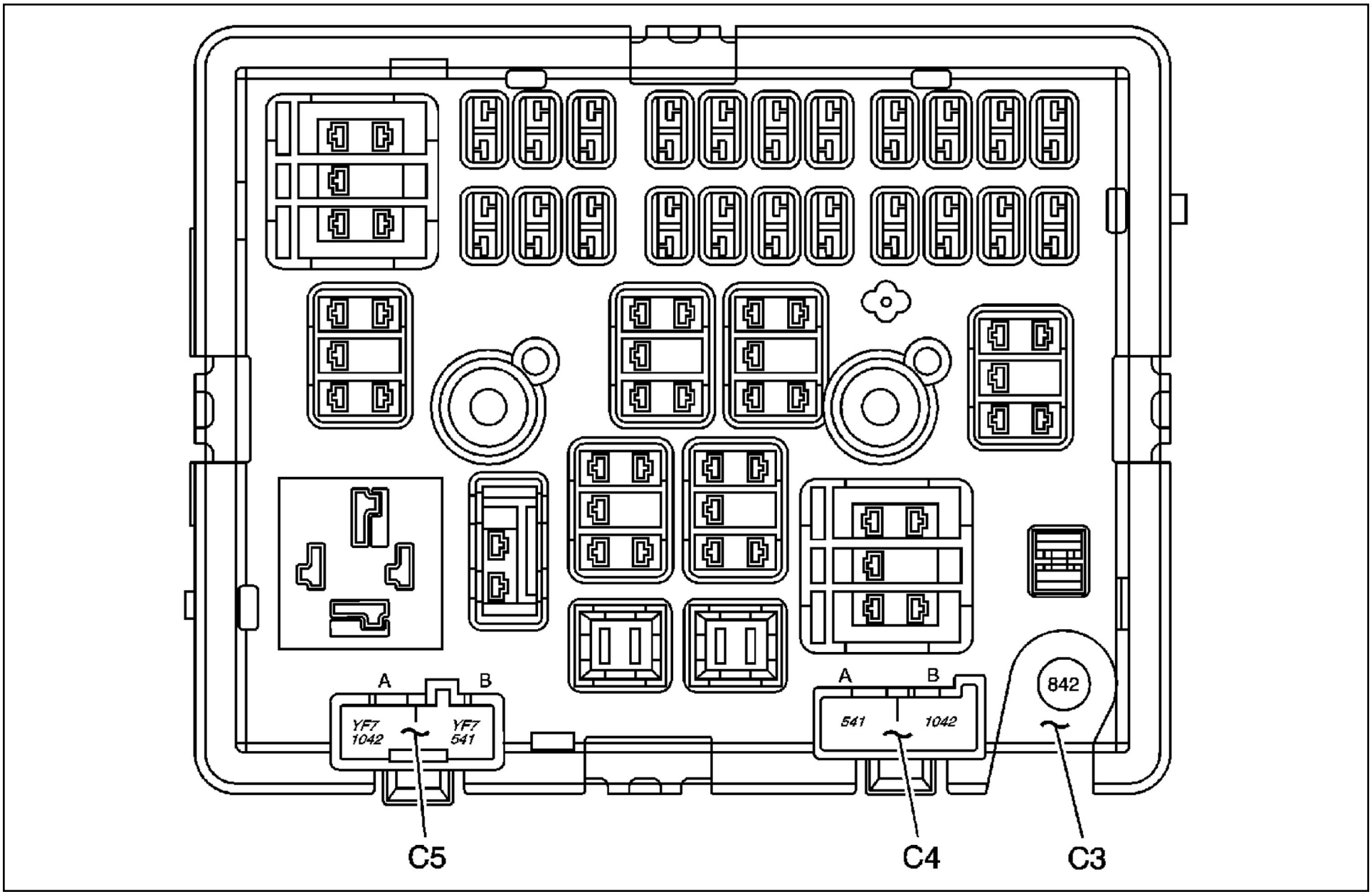

Power Distribution Centers: Body Fuse Block – Description

No.	Device	Rating	Description
1	SPARE Fuse	—	Not Used
2	OSRVM Fuse (DE5/DE7)	10A	Outside Rearview Mirror Switch
3	CTSY LAMP/SEO Fuse (YF7)	15A	CTSY LAMP Relay
4	LT REAR STOP/TRN Fuse	10A	Tail/Stop and Turn Signal Lamp - Left
5	REAR DR LCKS Fuse (Passenger/Cargo w/AU3)	10A	CARGO UNLCK Relay
6	RT REAR STOP/TRN Fuse	10A	Tail/Stop and Turn Signal Lamp - Right
7	DR LCKS Fuse (AU3)	10A	DRV UNLCK Relay
8	STOP/CHMSL Fuse	10A	Center High Mounted Stop Lamp (CHMSL) - Passenger/Cargo, Cruise Control Module (CCM) - Gas w/K34, Throttle Actuator Control Module (TCM) - JL4, Transmission Control Module and Engine Control Module (ECM) - Diesel
9	HVAC 1 Fuse	10A	HVAC Control Assembly (C49/DE5/DE7), Air Temperature Actuator, HVAC Control Processor, Auxiliary Blower Motor Relays & Air/Mode Actuators (C69)
10	HVAC Fuse	20A	HVAC Control Assembly, Vacuum Pump - Diesel
11	BRK Fuse	10A	Electronic Brake Control Module (EBCM), High Idle Switch - UF3, Traction Control Switch - JL4
12	HTD MIR/DEFOG Fuse (C49)	30A	REAR DEFOG Relay
13	REAR BLWR Fuse	30A	Low/Med/High Speed Blower Motor Relays - Auxiliary (C36/C69) or C409 (ENC)
14	DRV PWR TRN MIR Fuse	10A	Outside Rearview Mirror - Driver (DE7) or C405 (Cutaway)
15	DR LCK Fuse (AU3)	20A	DR LCKS Relay
16	UPFTR PRK LAMPS Fuse (YF7)	10A	C320 - Upfitter Wiring Harness
17	—	—	Not Used
18	LT REAR PRK Fuse	10A	Tail/Stop and Turn Signal Lamp - Left and License Lamp
19	PASS TRN MIR Fuse	10A	Outside Rearview Mirror - Passenger (DE7) and C405 (Cutaway)
20	RT REAR PRK Fuse	10A	Tail/Stop and Turn Signal Lamp - Right
21	TRLR PRK Fuse	15A	Trailer Wiring Harness - (UY7) or C405 (Cutaway)
22	FRT PRK Fuse	10A	Inflatable Restraint I/P Module Disable Switch, Park/Turn signal Lamps - LF/RF and Marker Lamps - LF/RF
23	RAP Relay (A31)	—	PWR WNDW Circuit Breaker
24	AUX Relay (YF7)	—	Upfitter Wiring Harness - C222 and C321
25	REAR DEFOG Relay (C49)	—	Rear Window Defogger Grid - Left/Right
26	CTSY LAMP Relay (YF7)	—	C320, C405 (Cutaway)
27	CARGO UNLCK Relay (Passenger/Cargo w/AU3)	—	Door Latch Assembly - Cargo
28	DRV UNLCK Relay (AU3)	—	Door Latch Assembly - Driver
29	PARK LAMP Relay	—	FRT PRK, LT REAR PRK, RT REAR PRK, TRLR PRK and UPFTR PRK LAMPS Fuses
30	DR/LCKS Relay (AU3)	—	Door Latch Assembly - Driver/Passenger/Cargo and Door Lock Actuators - LR/RR
31	PASS UNLCK Relay (AU3)	—	Door Latch Assembly - Passenger and Door Lock Actuators - LR/RR
32	AUX 1 Fuse (JL4/YF7)	50A	Upfitter Wiring Harness - C222, C321 (YF7)
		60A	EBCM (JL4)
33	AUX 2 Fuse (SEO/YF7)	50A	AUX Relay (YF7)
		20A	AUX Relay (SEO)
34	PWR WNDW Circuit Breaker (A31)	25A	Window Switch - Driver/Passenger

Power Distribution Centers: Body Fuse Block – Location

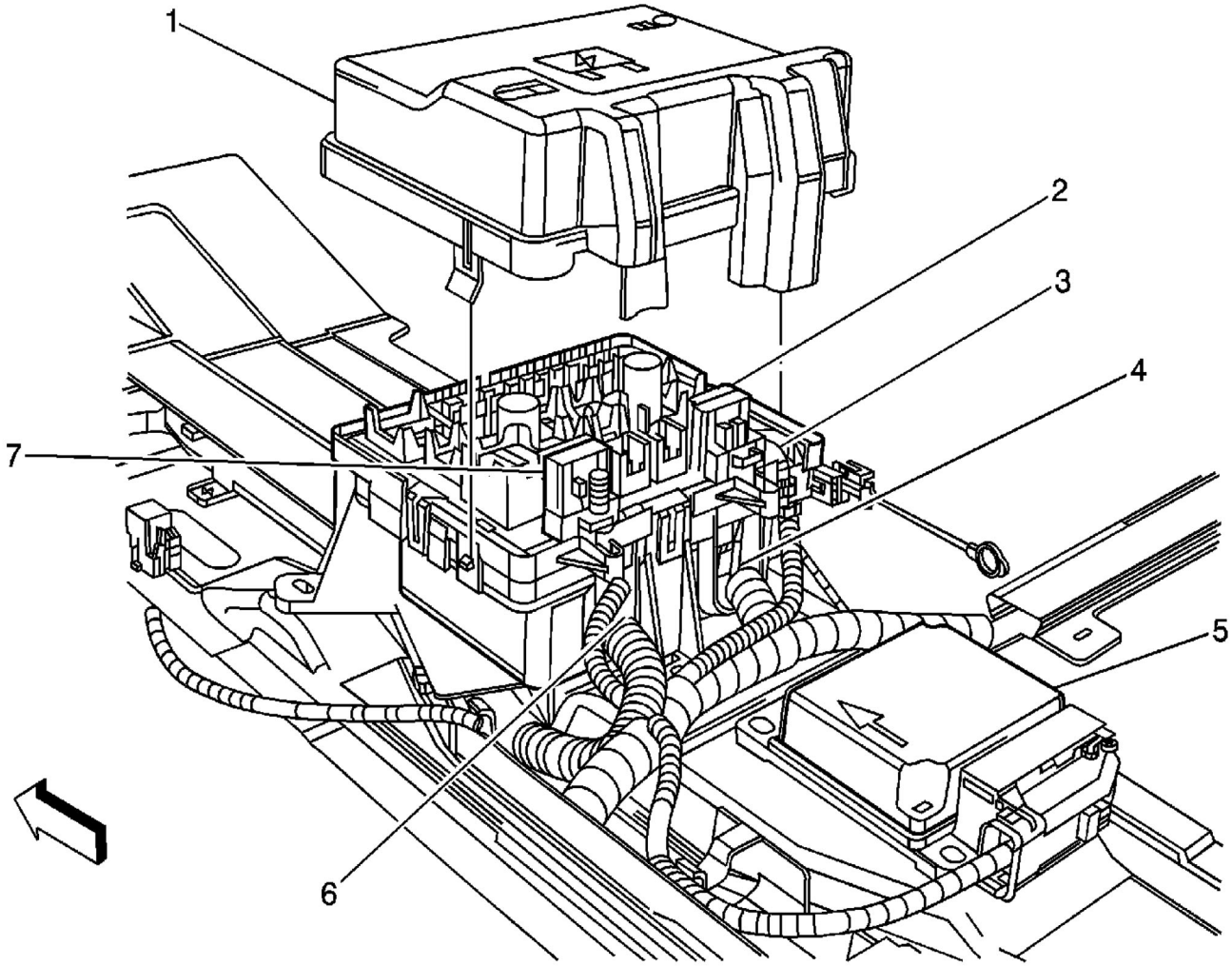

(1) Fuse Block Body – Cover
(2) Fuse Block Body – C4 (YF7)
(3) Fuse Block Body – C3
(4) Fuse Block Body – C1
(5) Inflatable Restraint Sensing and Diagnostic Module (SDM)
(6) Fuse Block Body – C2
(7) Fuse Block Body – C5 (YF7)

Connectors and Pinnouts

Not Available At Time of Publication

2006 & 2007 G/H FULL-SIZE VAN ELECTRICAL

Schematic Description and Navigation Instructions

Background

The Schematics included in this document are part of GM's IVED drawing system. These are the official drawings used to develop vehicle programs, produce wire harnesses and develop service documentation. The following information is offered to help you understand how they are organized and how to use them.

Organization

It's impossible to put all the information on only one drawing. The vehicle is broken down by subsystem. The schematics are organized by subsystem number not by name. That's why the index doesn't follow an alphabetical order of the subsystems.

A number has been added on the bottom right of each page that indicates the subsystem number, revision level, and page number.

Example:

The first sheet is **826010a_004_01** *(see page D-3)*

826010a_004_01	The "*826010a"* is the Object ID on the drawing and represents the subsystem.
826**010**a_004_01	The "*010"* represents the subsystem, in this case Power Distribution. Other examples are "014" for Ground Distribution and "020" for Engine Controls.
826010**a**_004_01	The "*a*" represents the first or only drawing for that subsystem. In this case multiple Power Distribution Schematics are included. "a" is for Underhood Bussed Electrical Center (UH BEC), "b" for Power Moding, and "c" for the Body BEC.
826010a_**004**_01	The "*004*" represents the revision level and is not important for most of your needs.
826010a_004_**01**	The "*01*" represents panel set one on the schematic and indicates the page number. This Schematic has seven pages for example.

Navigation

Every wire in the vehicle is given a unique circuit number. These numbers are indicated on the schematics in bold type next to the wire. An entire subsystem usually can't be represented by only one page. How do you determine where a wire is connected to once it leaves the page? Either the signal is connected somewhere else in the same subsystem or it goes to another subsystem.

(continued on next page)

(Overview — continued from previous page)

Arrows and "Home" Plates

An Arrow is used to indicate that the signal stays within the same subsystem. The schematic indicates the circuit number and (page #) next to the arrow. A pointed arrow (→) points to where it's going to. A receiving arrow (➢—) shows what page it came from.

A "Baseball Home Plate" ⬙ or ⬘ indicates that the signal goes to another subsystem.

Example:

A ⬙ is shown on the upper right of the first schematic Power Distribution 826010a_004_01. *(see page D-3)*
This is an 842 circuit and the "baseball plate" indicates which subsystem it goes to. It is marked:
(PWR DIST)
BATTERY
The inside of the "plate" is marked Bbec for Body BEC.

The other end of the signal is shown in Body BEC subsystem drawing 10c. *(see page D-11)*. Multiple "baseball plates" are shown so you look for the 842 circuit to identify the proper circuit. You can find the location of the subsystem by checking the index or from the Master System drawing. The Master System drawing also provides the Subsystem (Object ID) number shown on the bottom right of each schematic (xxxx010c_xx_xx on page D-11).

Other Information

Other information on the schematics are wire color and size. The size is shown in square mm. Connector information is indicated for devices. Terminal assignments are shown for devices. The connector PN is for the harness end not the device.

2006 & 2007 G/H FULL-SIZE VAN ELECTRICAL

Power Distribution (UH BEC)

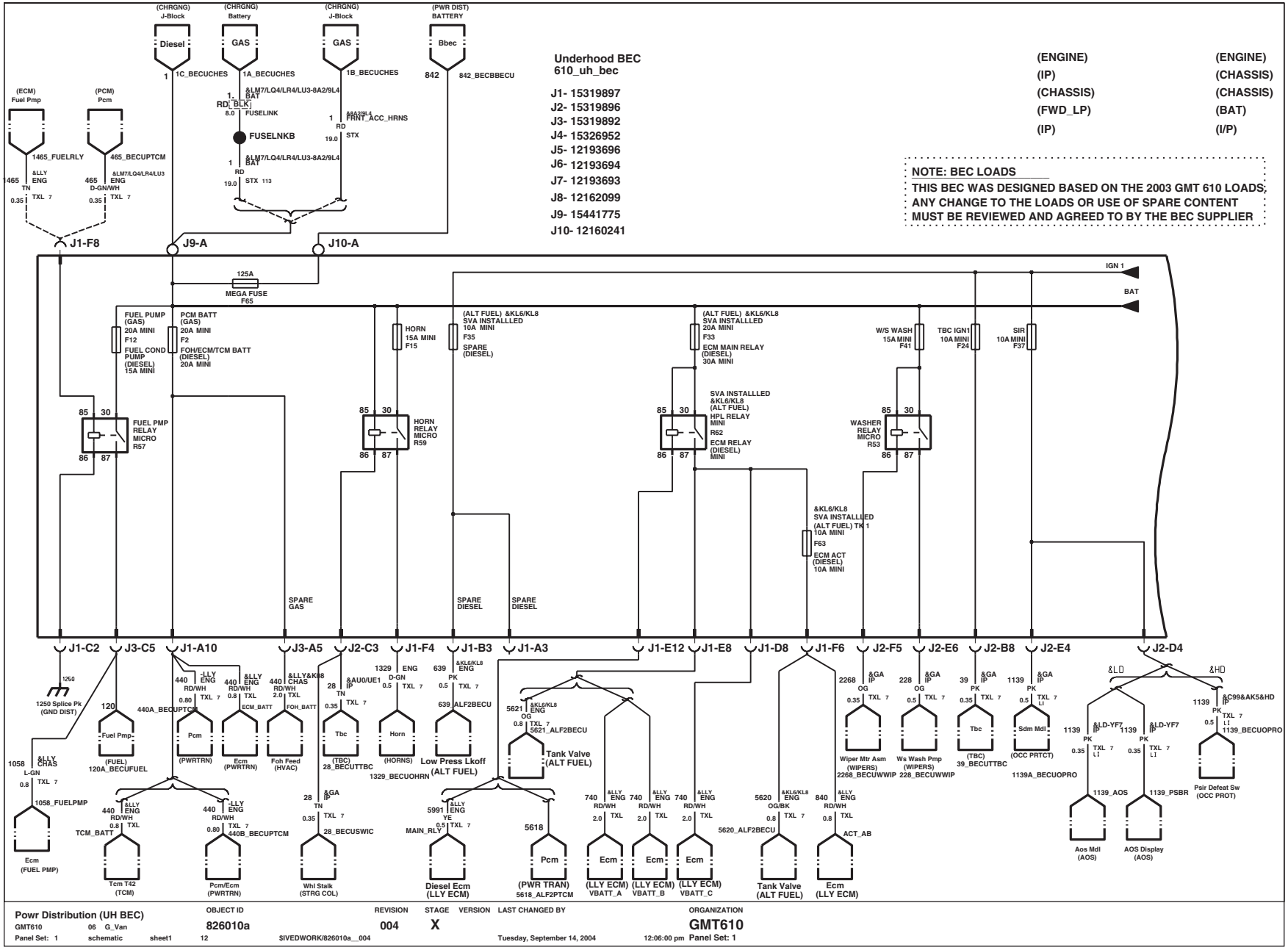

Power Distribution (UH BEC)

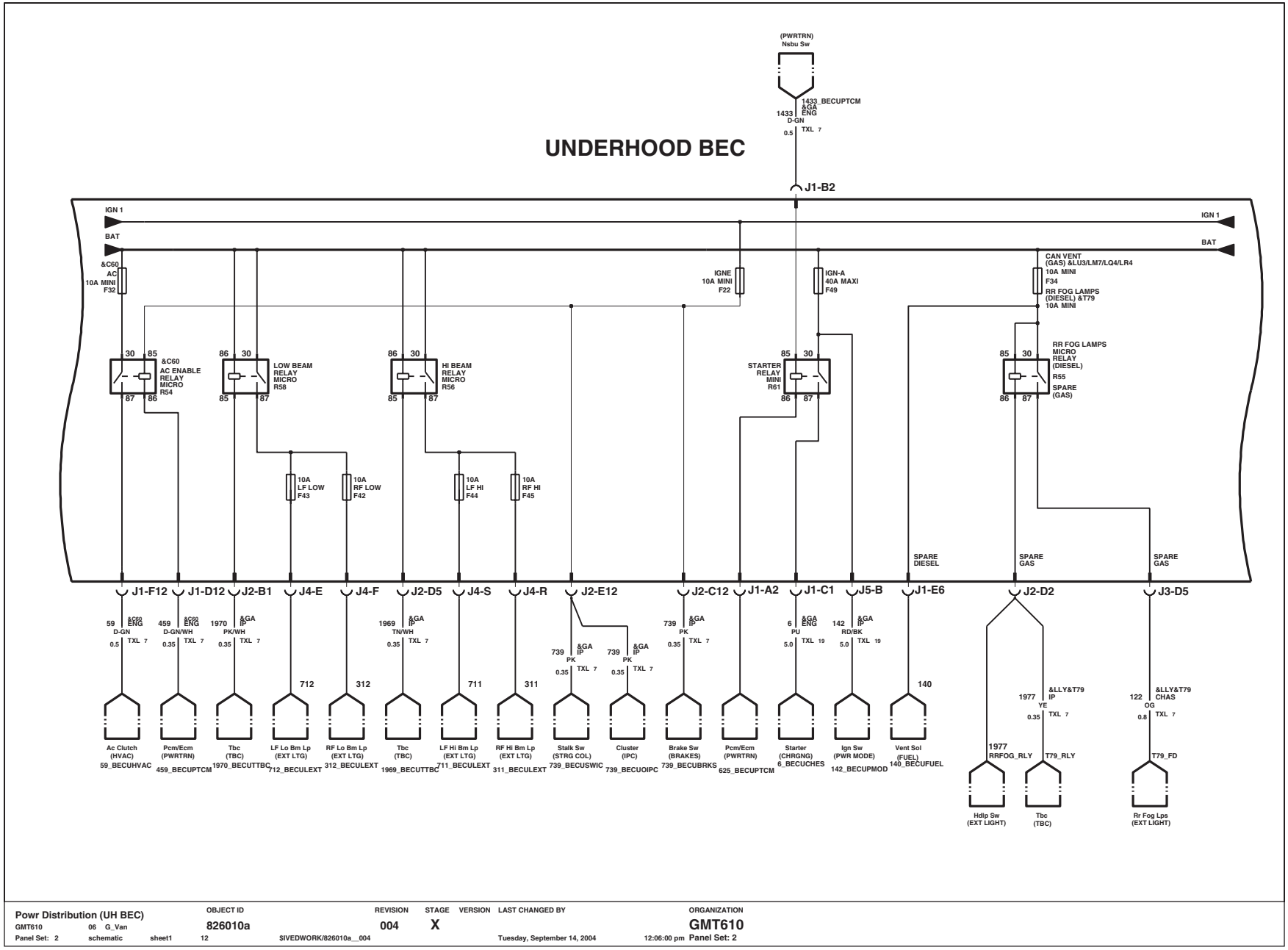

Power Distribution (UH BEC)

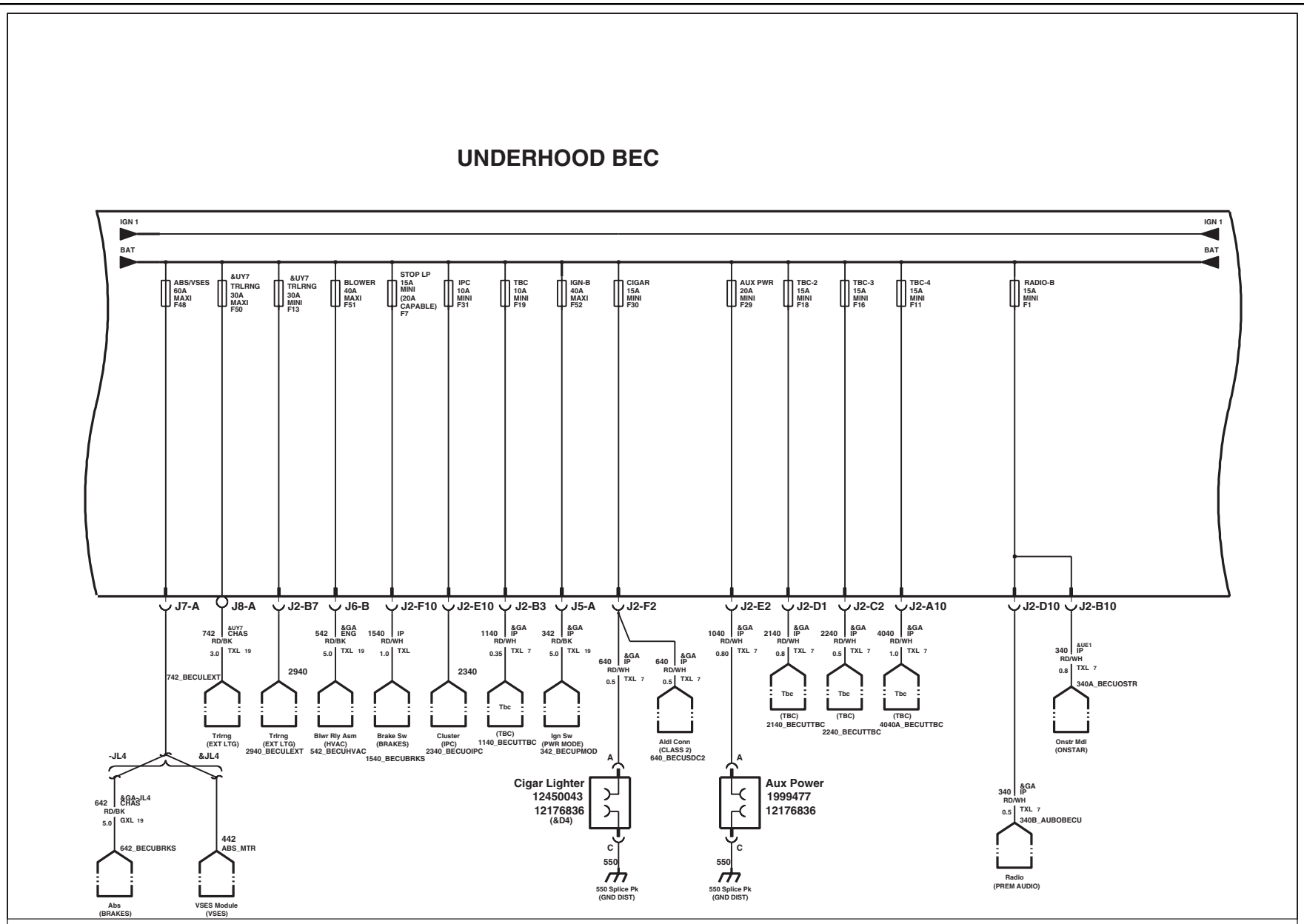

Power Distribution (UH BEC)

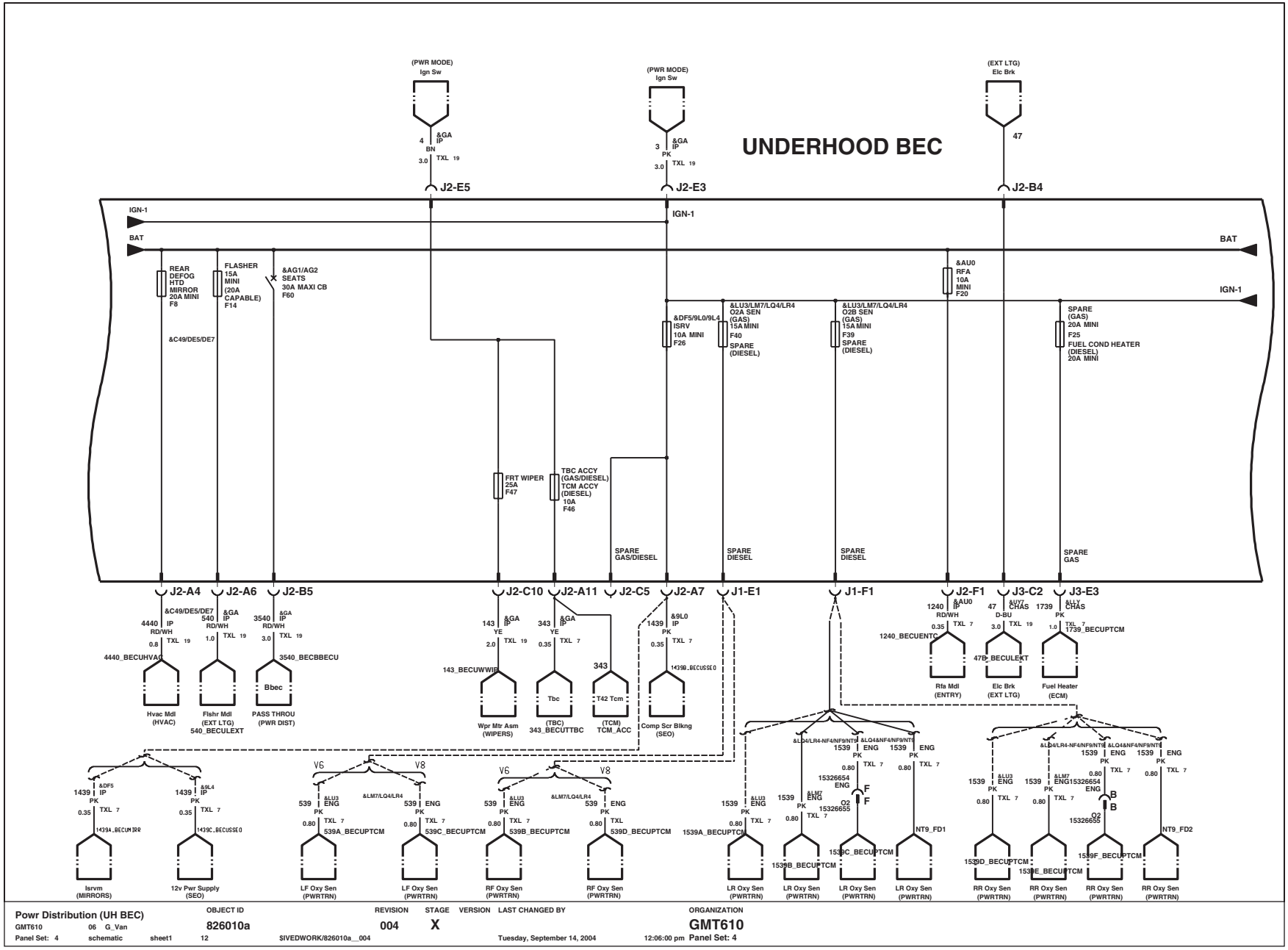

Power Distribution (UH BEC)

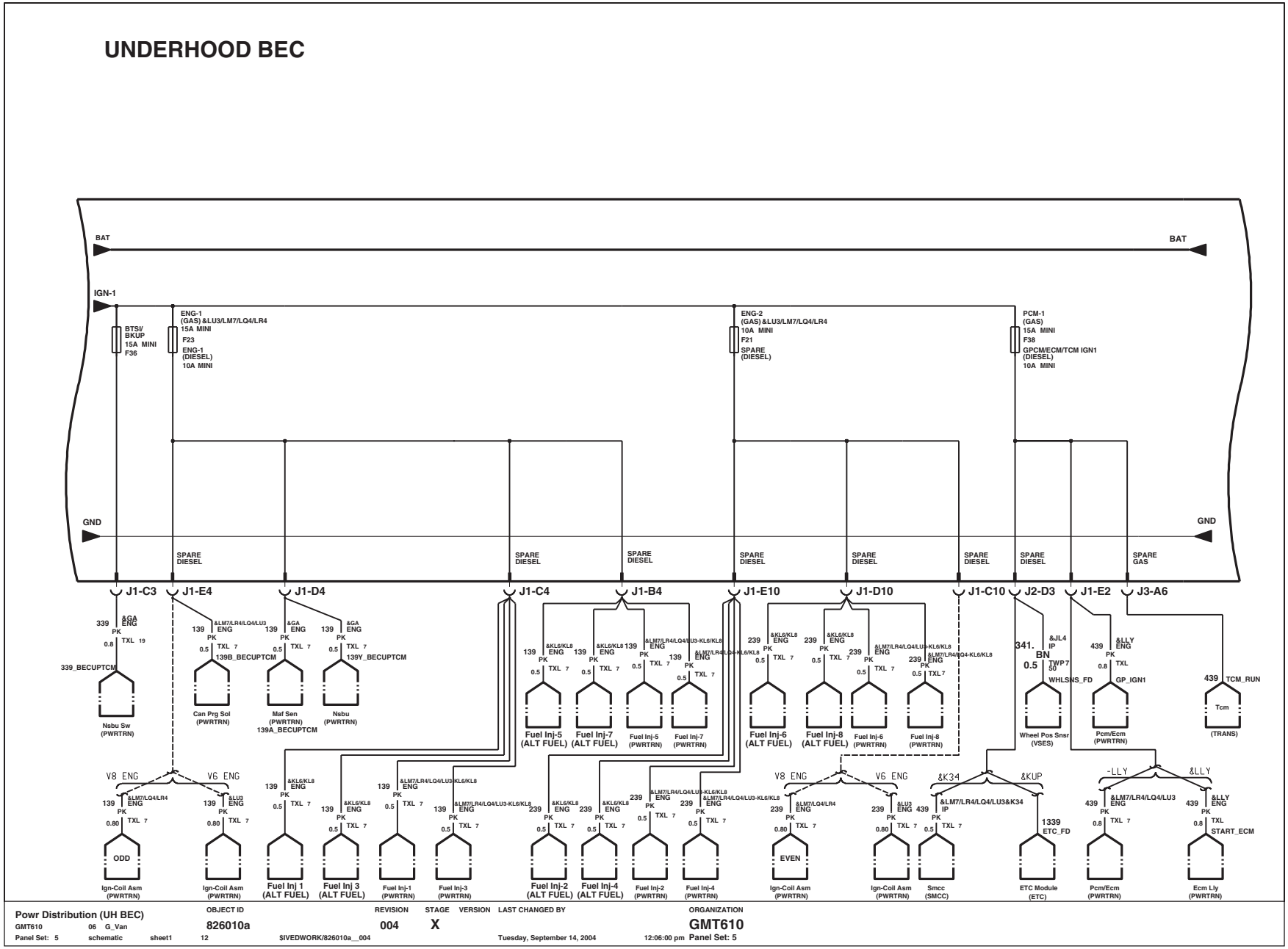

Power Distribution (UH BEC)

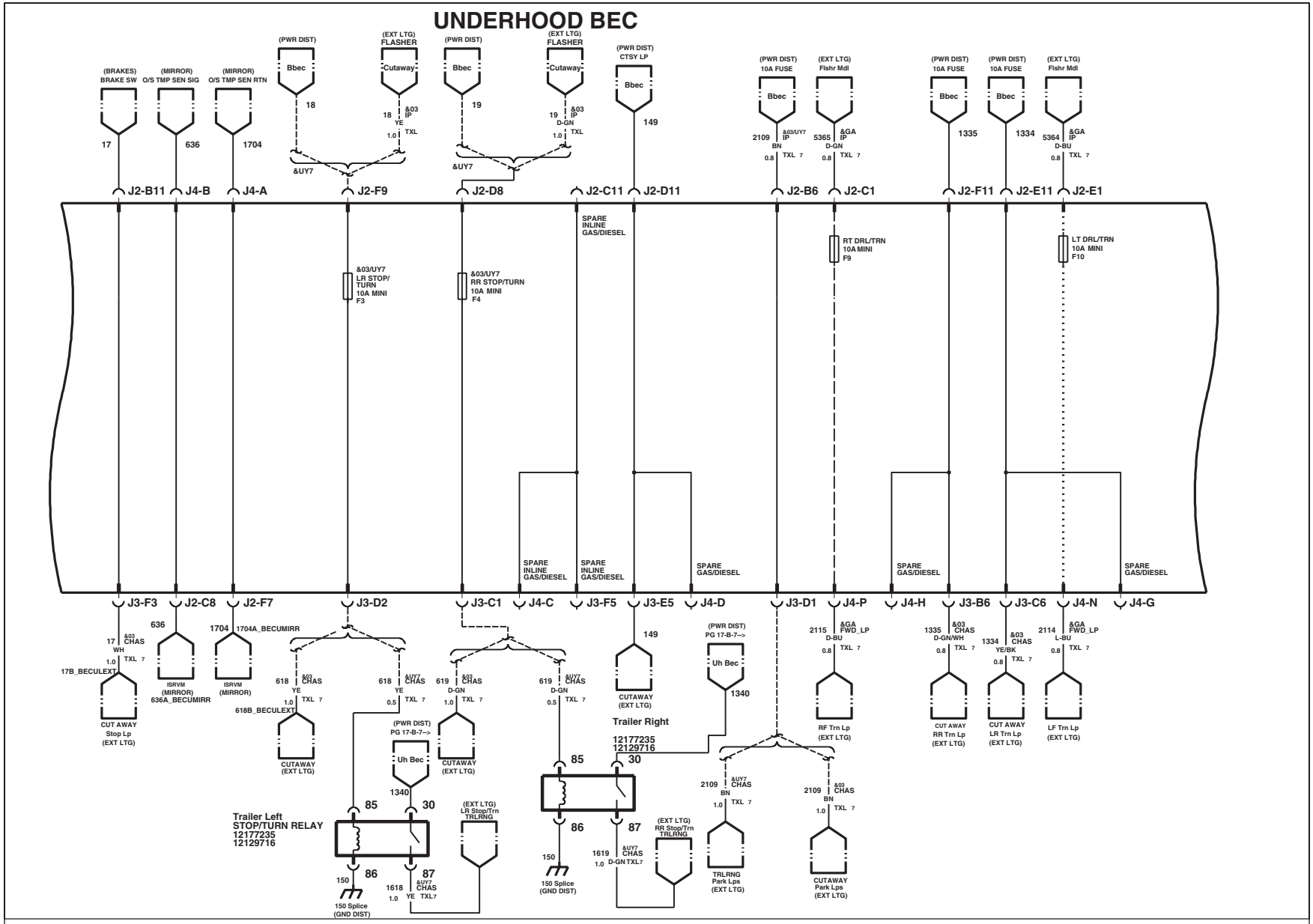

Power Distribution (UH BEC)

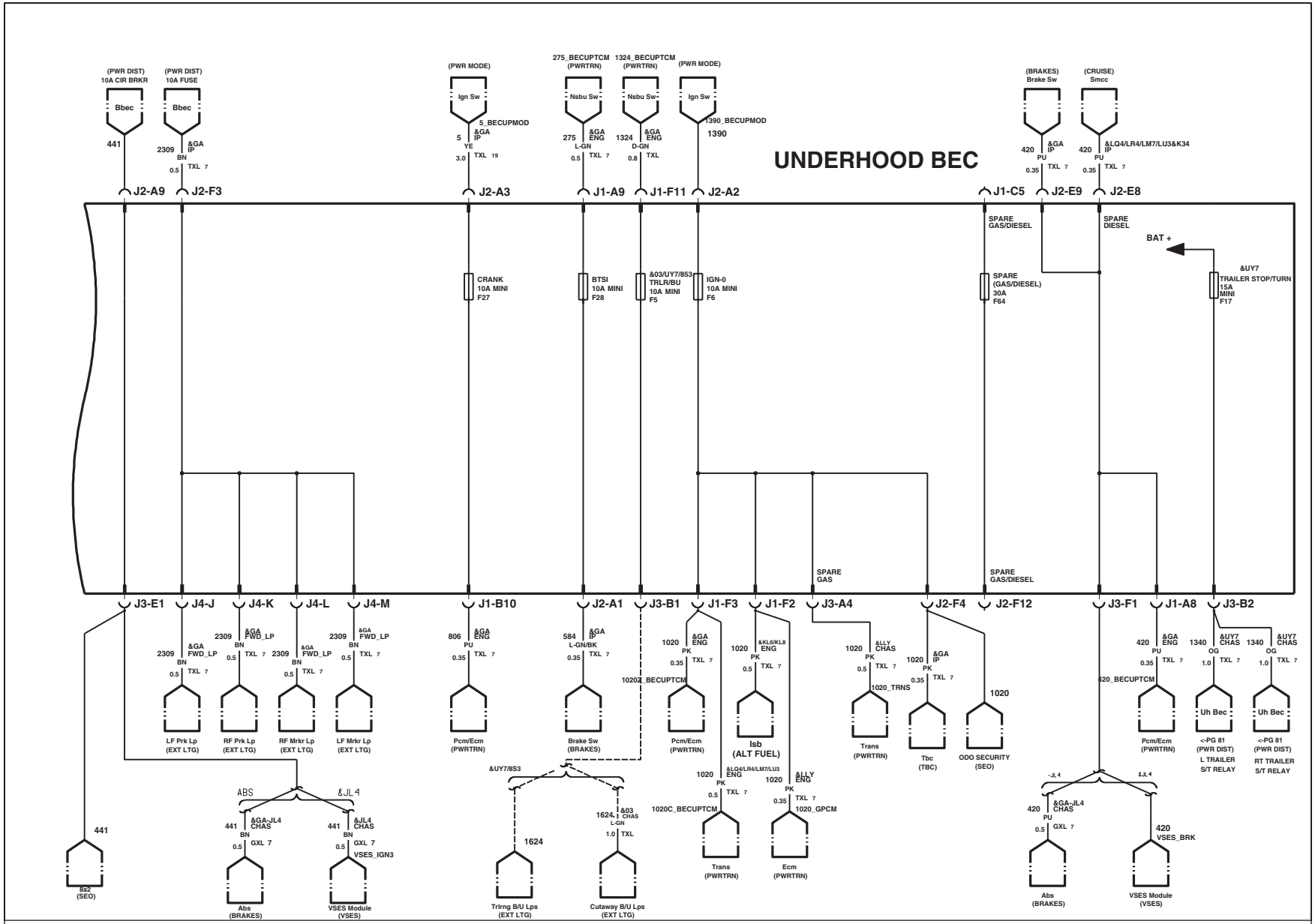

Power Moding

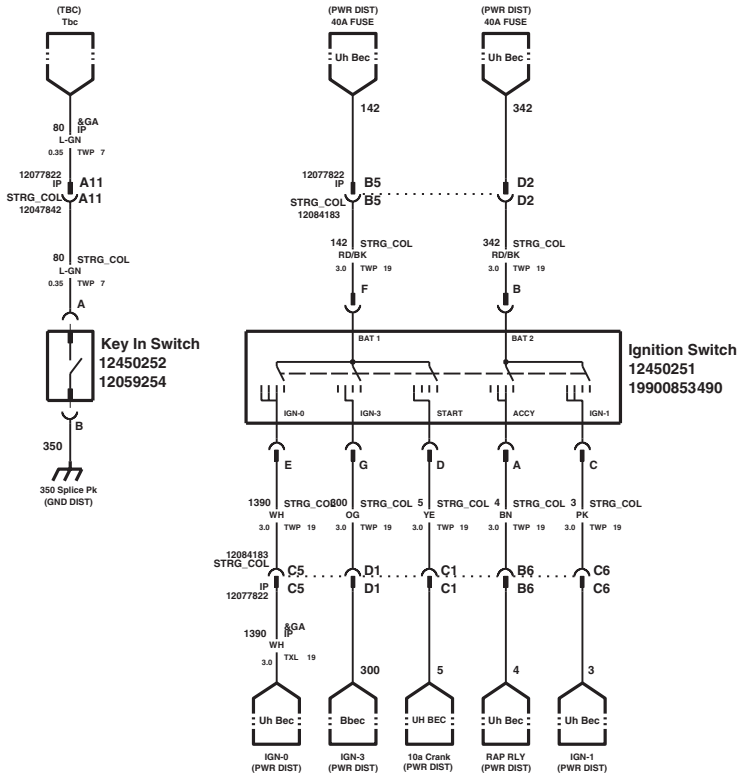

Power Moding	OBJECT ID	REVISION	STAGE	VERSION	LAST CHANGED BY	ORGANIZATION
GMT610 06 G_Van	826010b	002	X			GMT610
Panel Set: 1 schematic sheet1 $ 4	IVEDWORK/826010b__002				Monday, December 1, 2003 5:08:39 pm	Panel Set: 1

Power Distribution (Body BEC)

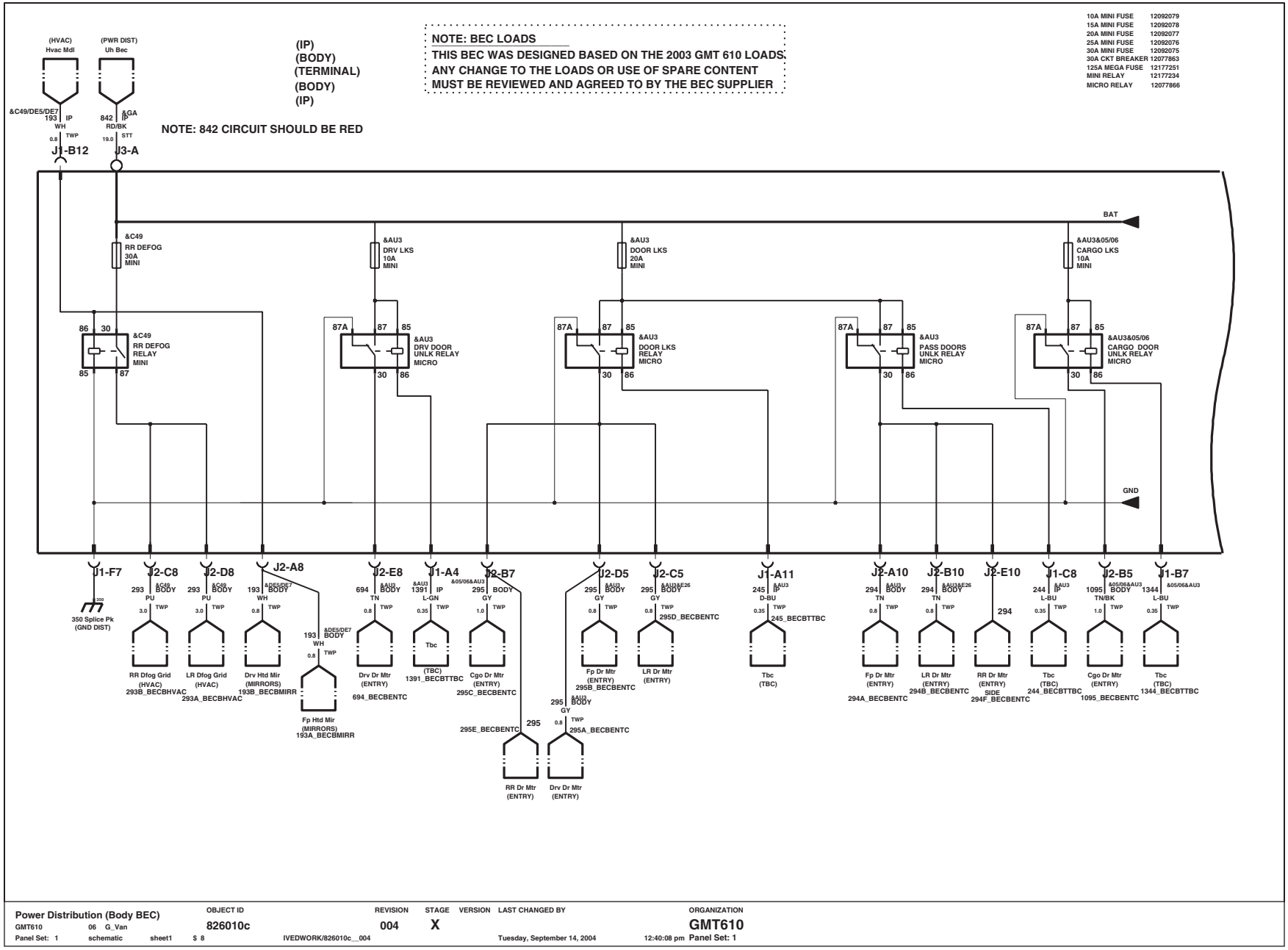

Power Distribution (Body BEC)

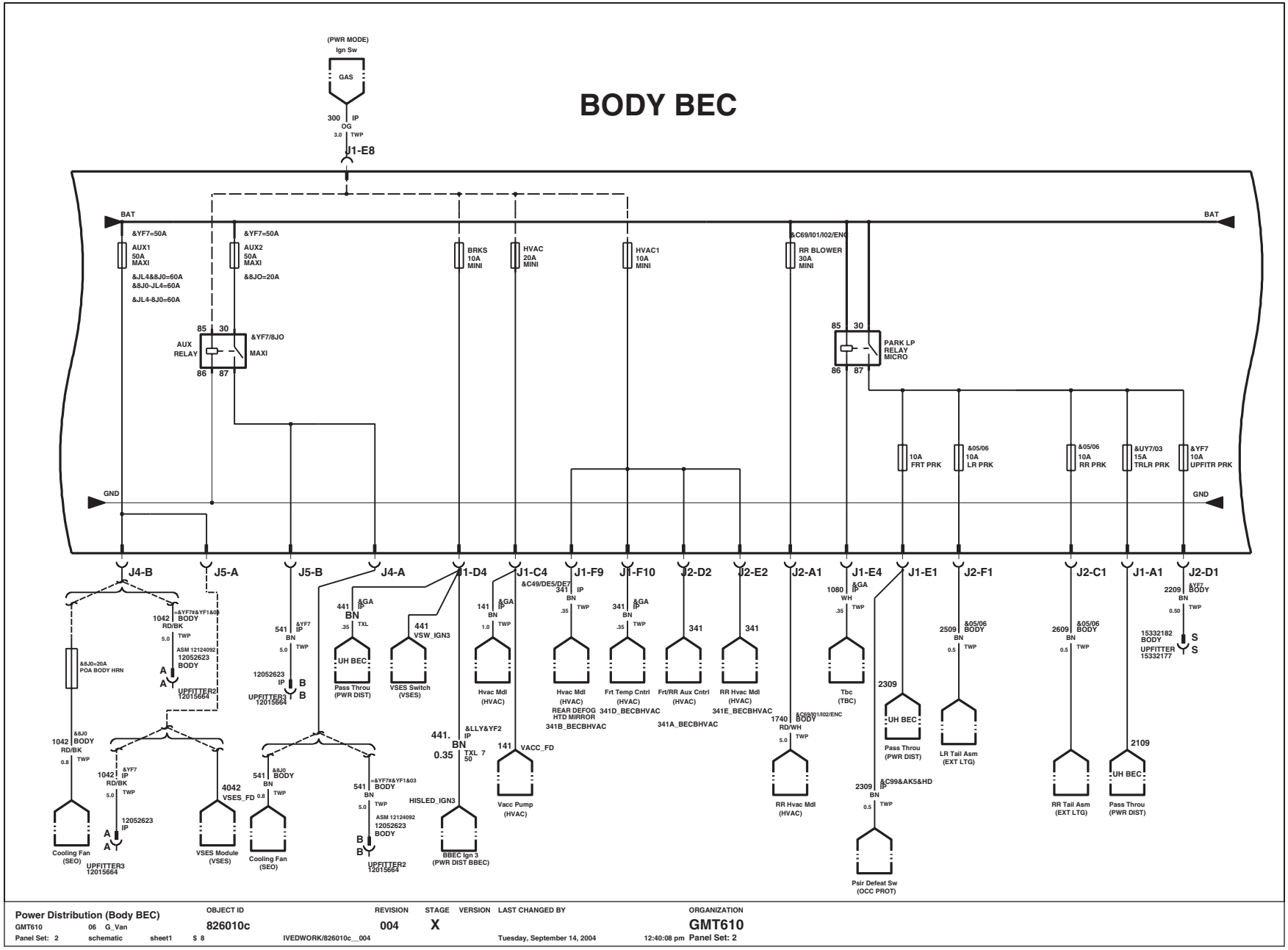

Power Distribution (Body BEC)

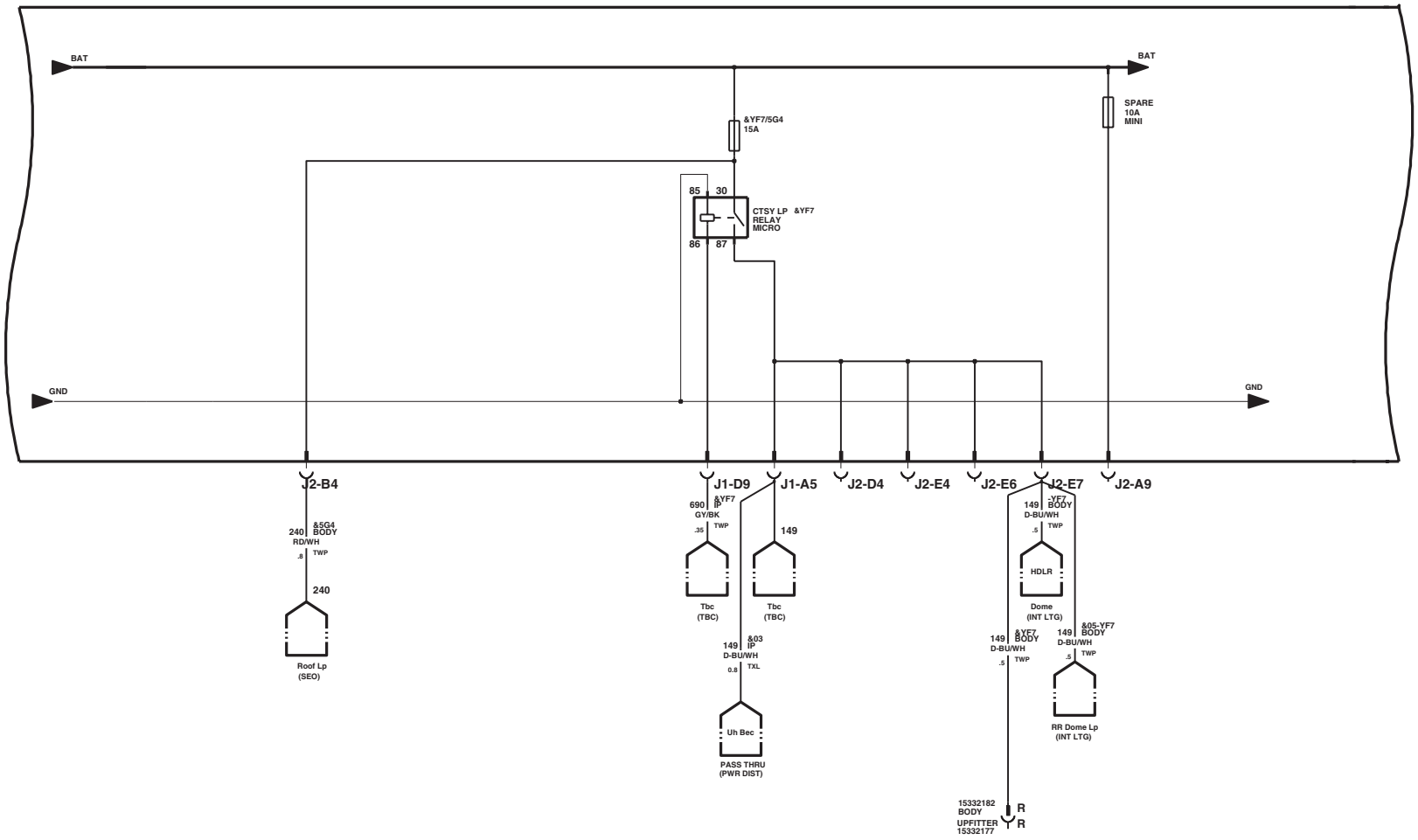

Power Distribution (Body BEC)	OBJECT ID	REVISION	STAGE	VERSION	LAST CHANGED BY	ORGANIZATION
GMT610 06 G_Van	826010c	004	X			GMT610
Panel Set: 3 schematic sheet1 $ 8	IVEDWORK/826010c__004				Tuesday, September 14, 2004 12:40:08 pm	Panel Set: 3

Power Distribution (Body BEC)

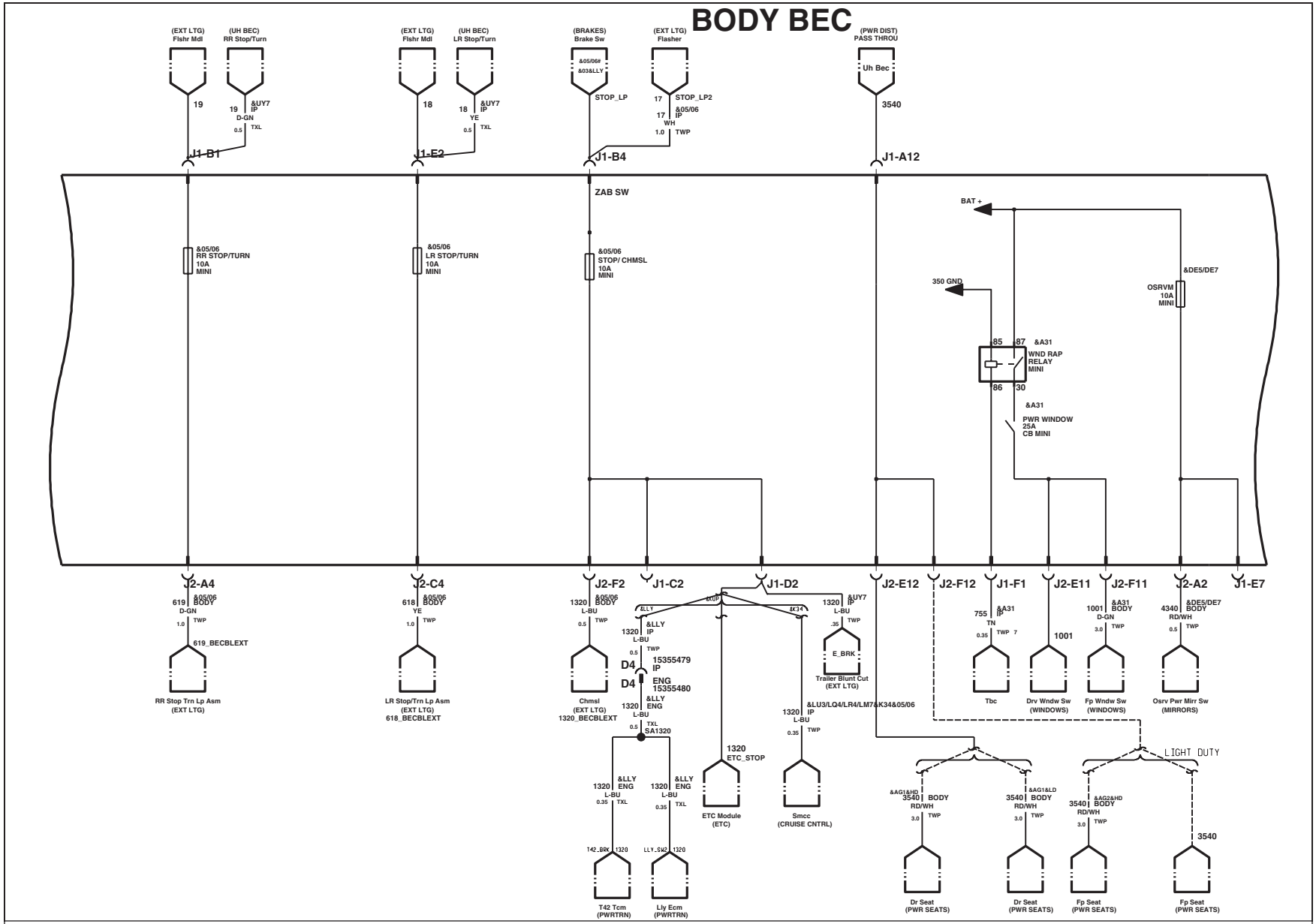

Power Distribution (Body BEC)

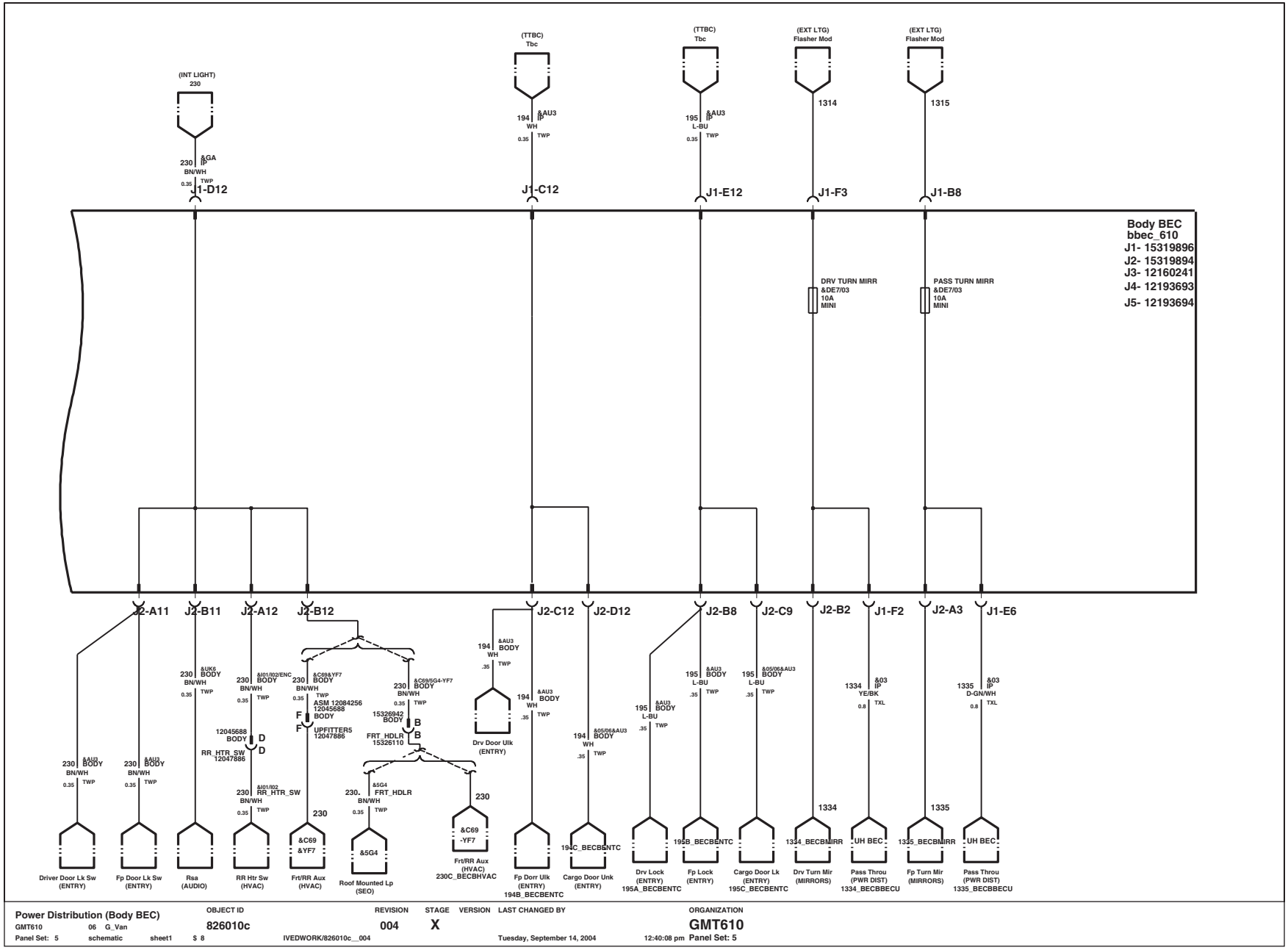

Ground Distribution

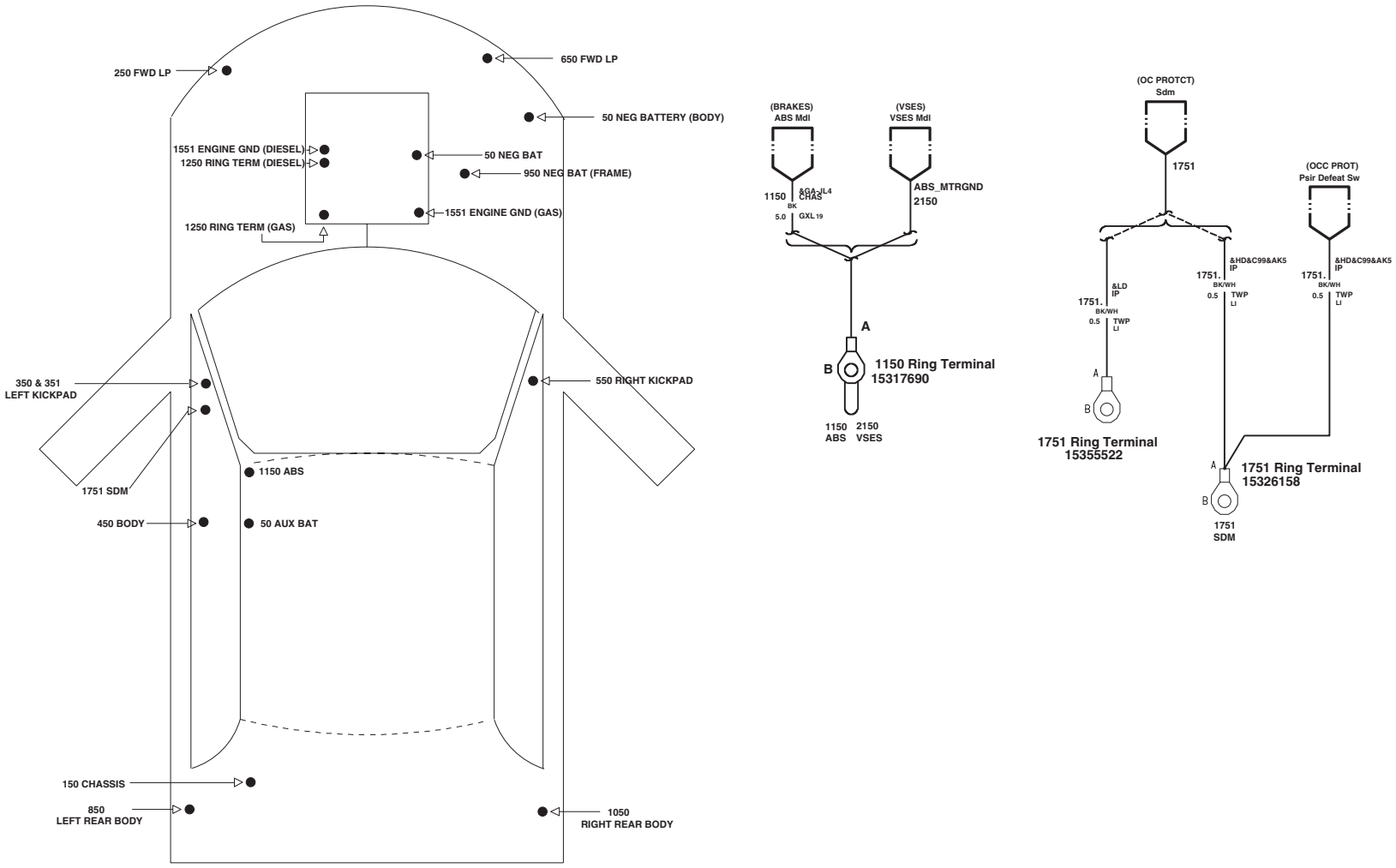

Ground Distribution	OBJECT ID	REVISION	STAGE	VERSION	LAST CHANGED BY	ORGANIZATION
GMT610 06 G_Van	826014a	004	X			GMT610
Panel Set: 1 schematic sheet1 $ 7	IVEDWORK/826014a__004				Tuesday, September 14, 2004 11:33:06 am	Panel Set: 1

Ground Distribution

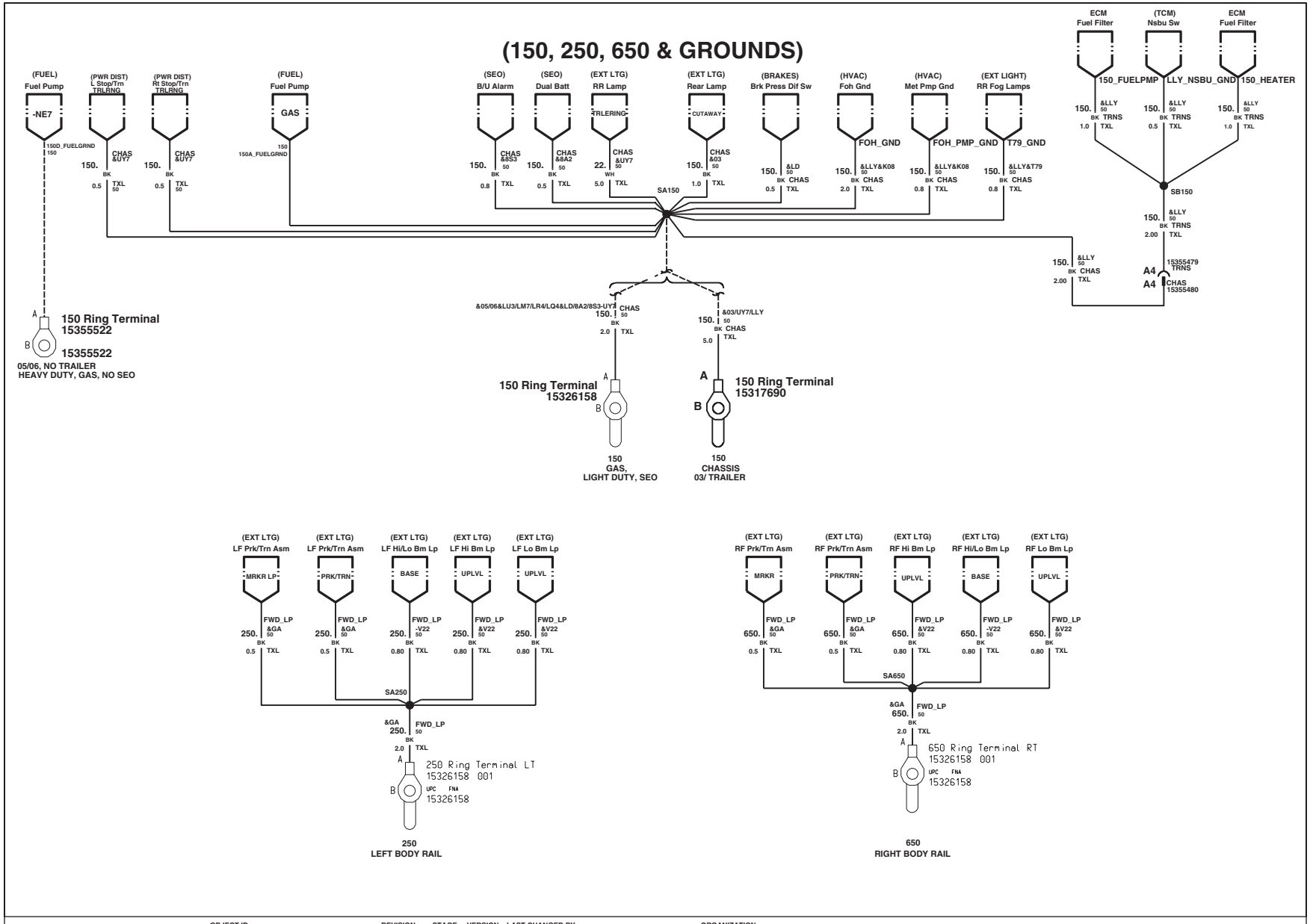

Ground Distribution

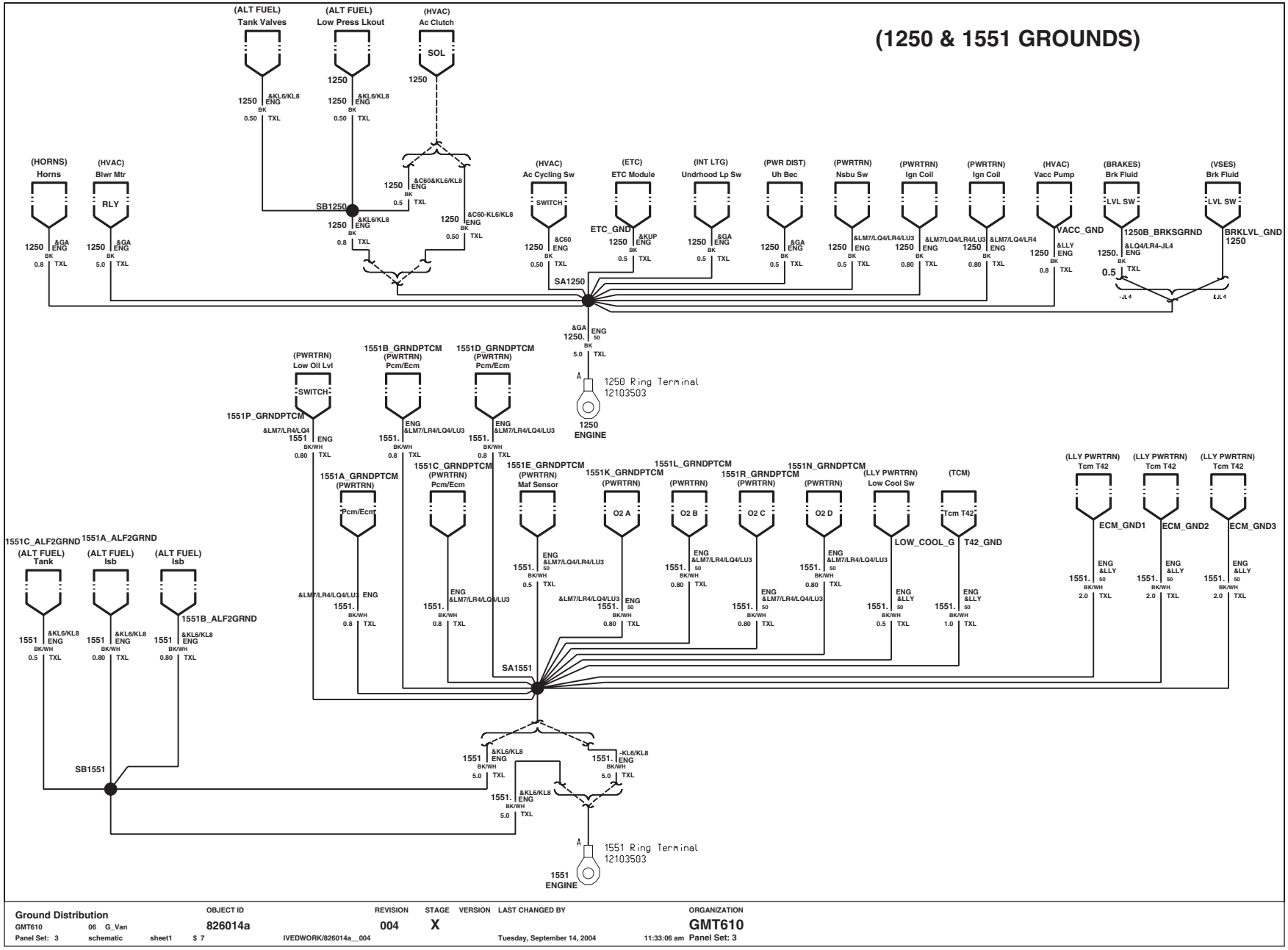

Ground Distribution

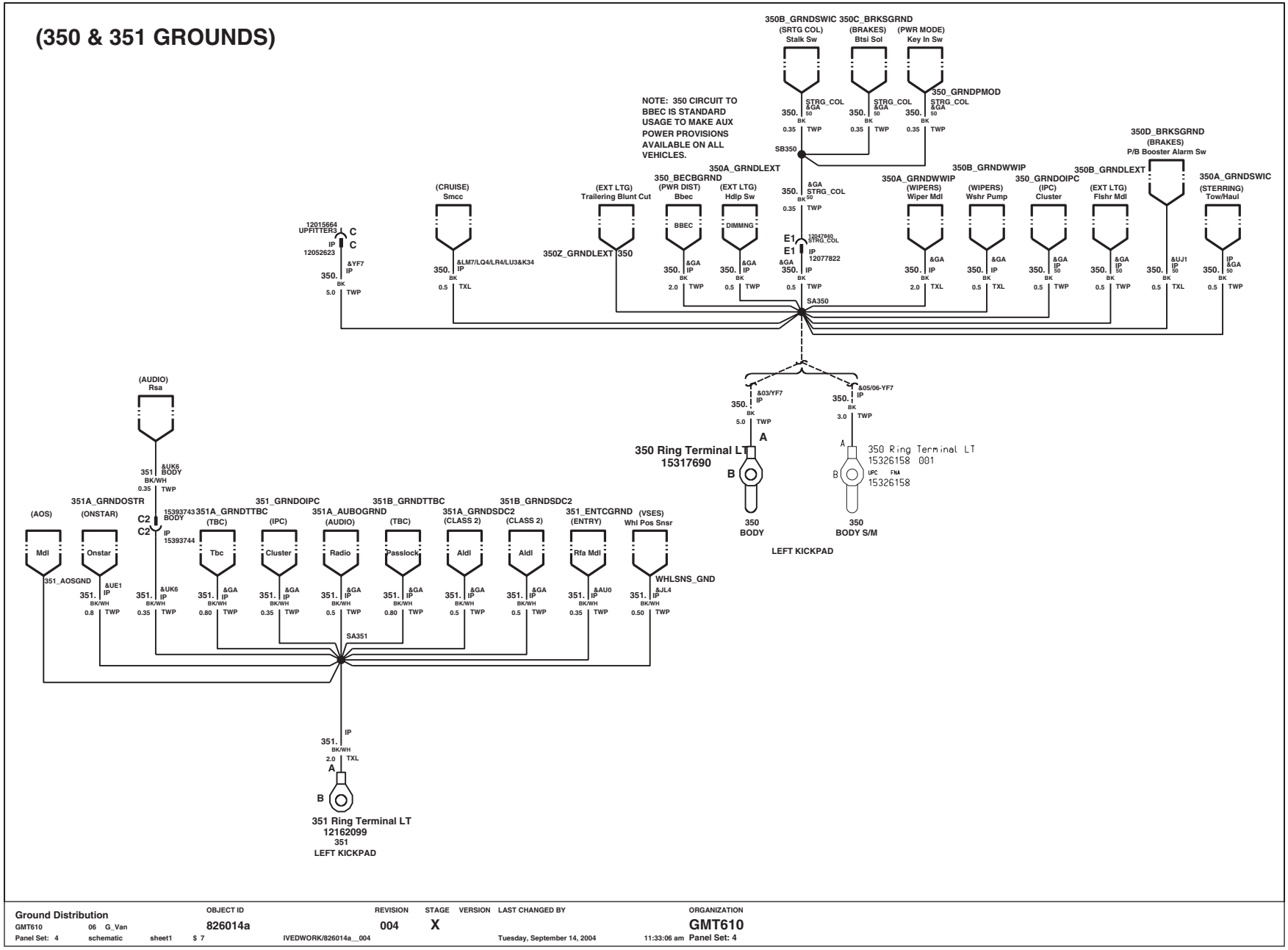

Ground Distribution	OBJECT ID	REVISION	STAGE	VERSION	LAST CHANGED BY	ORGANIZATION
GMT610 06 G_Van	826014a	004	X			GMT610
Panel Set: 4 schematic sheet1 $ 7	IVEDWORK/826014a__004				Tuesday, September 14, 2004 11:33:06 am	Panel Set: 4

Ground Distribution

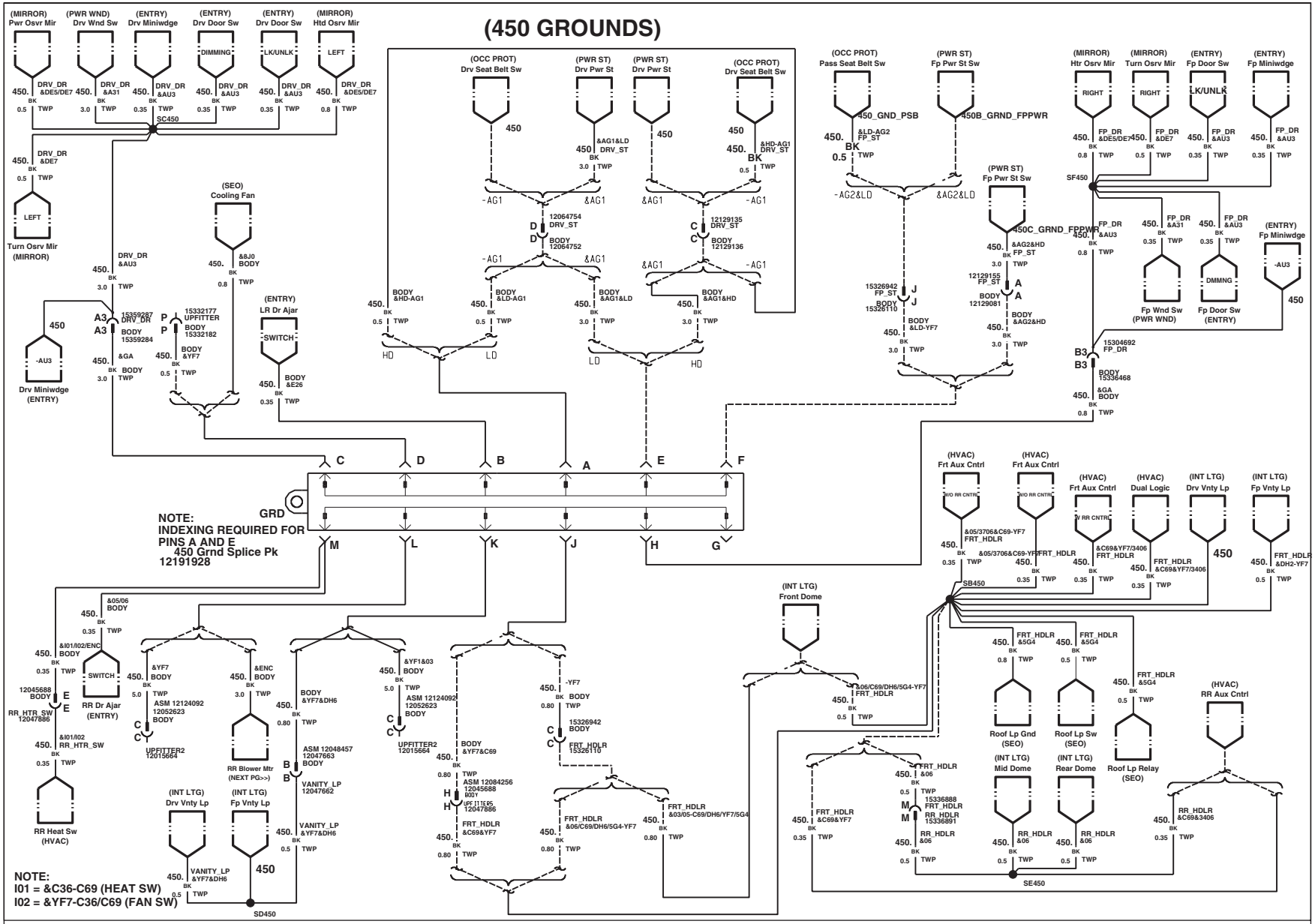

Ground Distribution

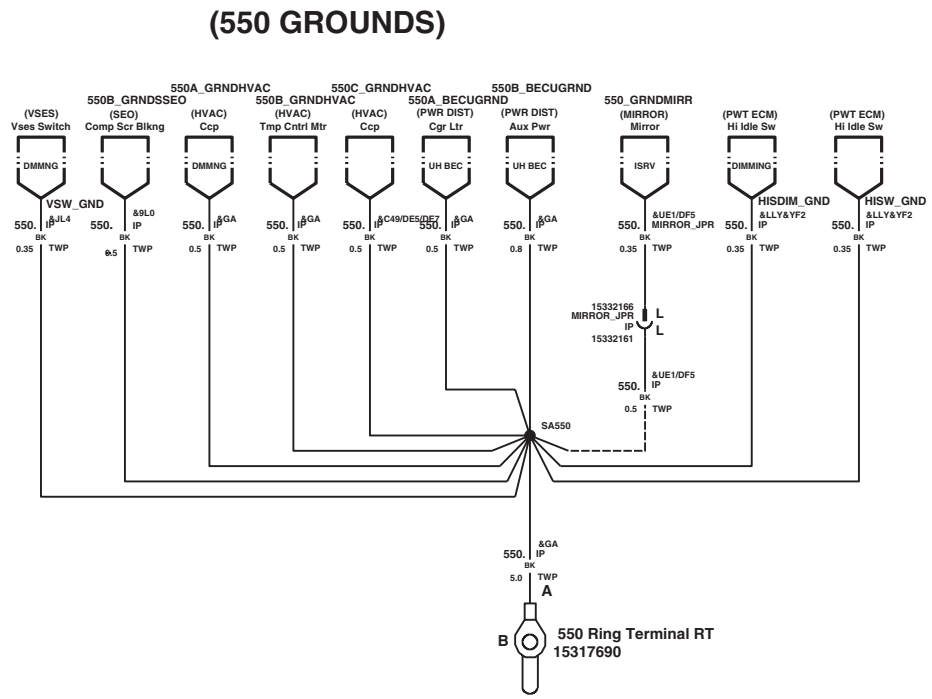

Ground Distribution	OBJECT ID	REVISION	STAGE	VERSION	LAST CHANGED BY	ORGANIZATION
GMT610 06 G_Van	826014a	004	X			GMT610
Panel Set: 6 schematic sheet1 $ 7	IVEDWORK/826014a__004				Tuesday, September 14, 2004 11:33:06 am	Panel Set: 6

Ground Distribution

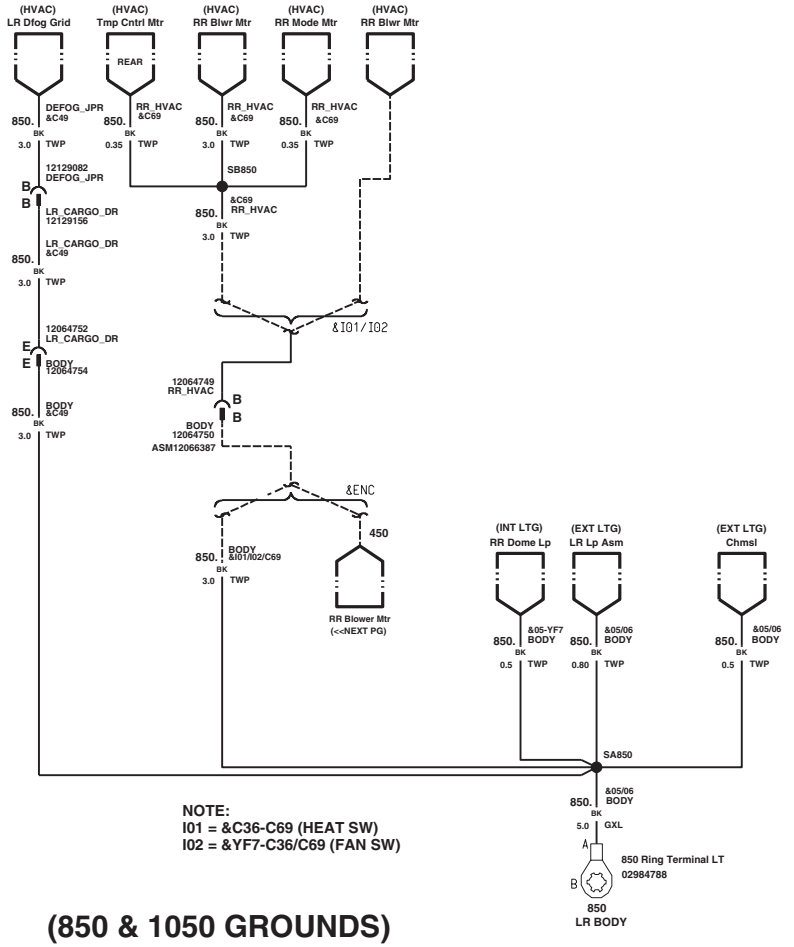

NOTE:
I01 = &C36-C69 (HEAT SW)
I02 = &YF7-C36/C69 (FAN SW)

(850 & 1050 GROUNDS)

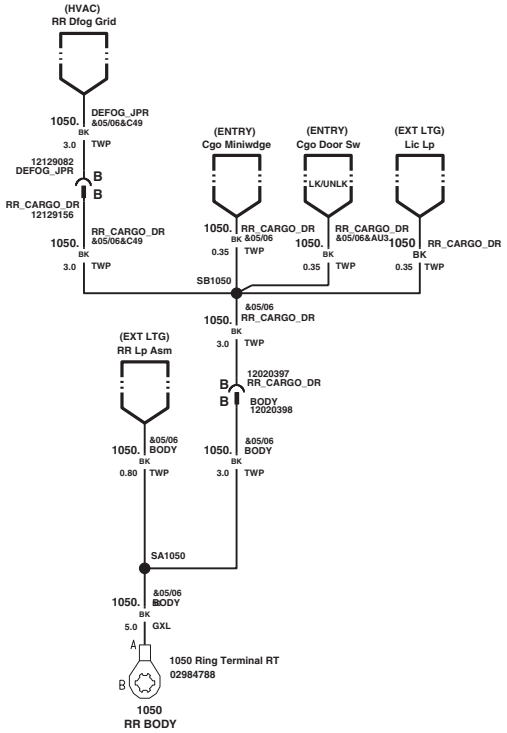

NOTE:
FOR 2003 SOP THE 850 GROUND IS LOCATED ON THE RIGHT AND 1050 IS LOCATED ON THE LEFT.

Ground Distribution	OBJECT ID	REVISION	STAGE	VERSION	LAST CHANGED BY	ORGANIZATION
GMT610 06 G_Van	826014a	004	X			GMT610
Panel Set: 7 schematic sheet1 7	$IVEDWORK/826014a__004				Tuesday, September 14, 2004 11:33:06 am	Panel Set: 7

Powertrain Controls (V6 PCM)

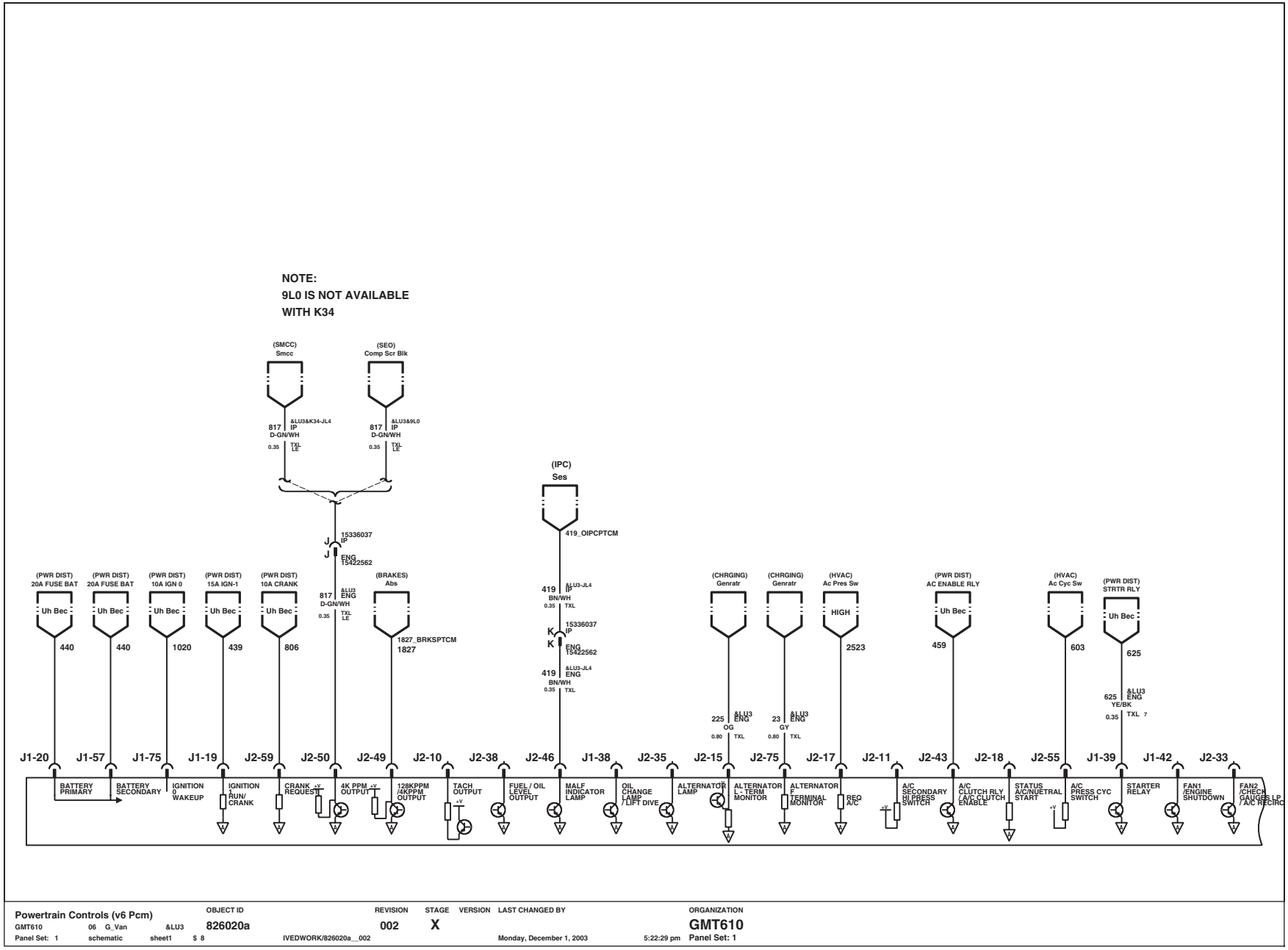

Powertrain Controls (V6 PCM)

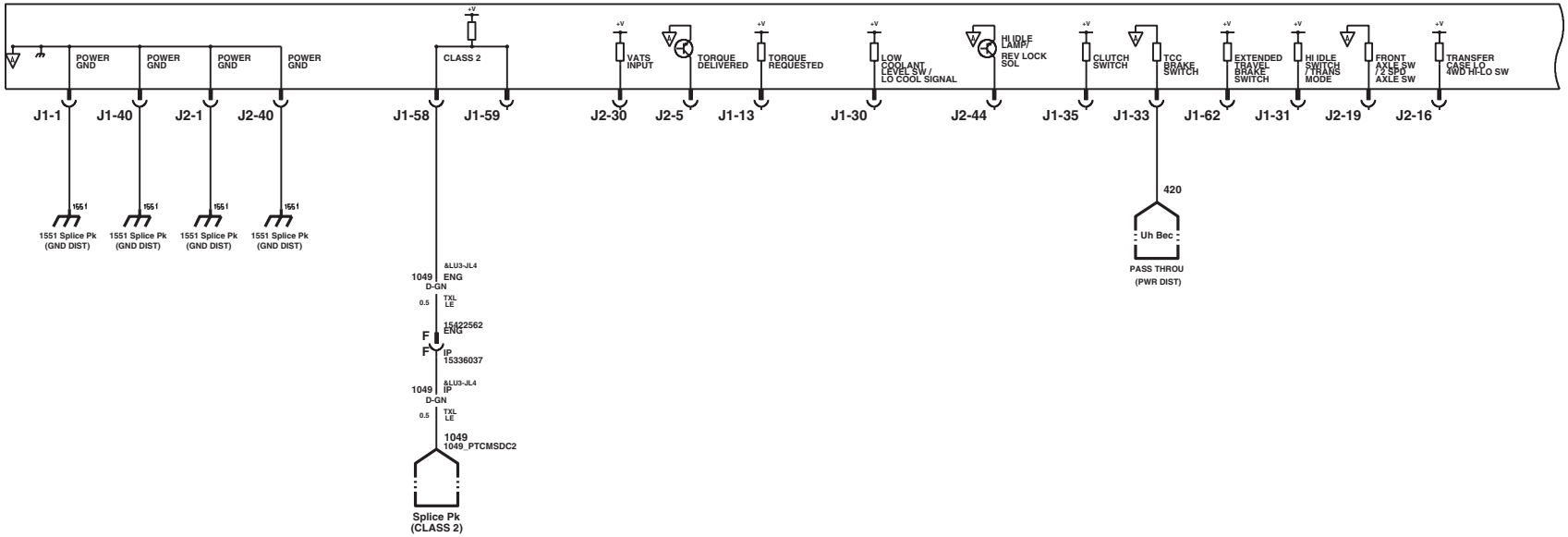

Powertrain Controls (v6 Pcm)	OBJECT ID	REVISION	STAGE	VERSION	LAST CHANGED BY	ORGANIZATION
GMT610 06 G_Van &LU3	826020a	002	X			GMT610
Panel Set: 2 schematic sheet1 8	$IVEDWORK/826020a__002				Monday, December 1, 2003 5:22:29 pm	Panel Set: 2

Powertrain Controls (V6 PCM)

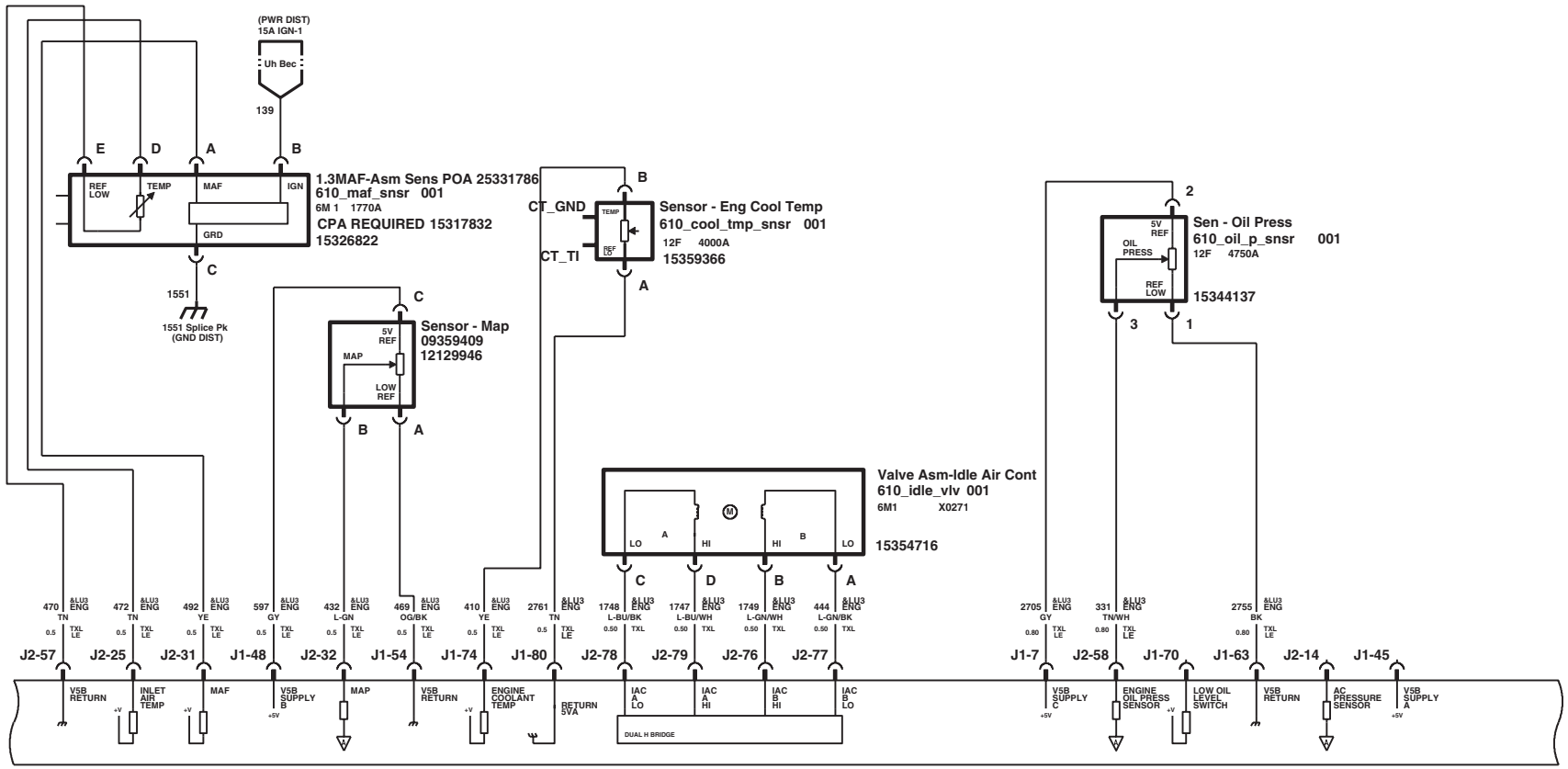

Powertrain Controls (V6 PCM)

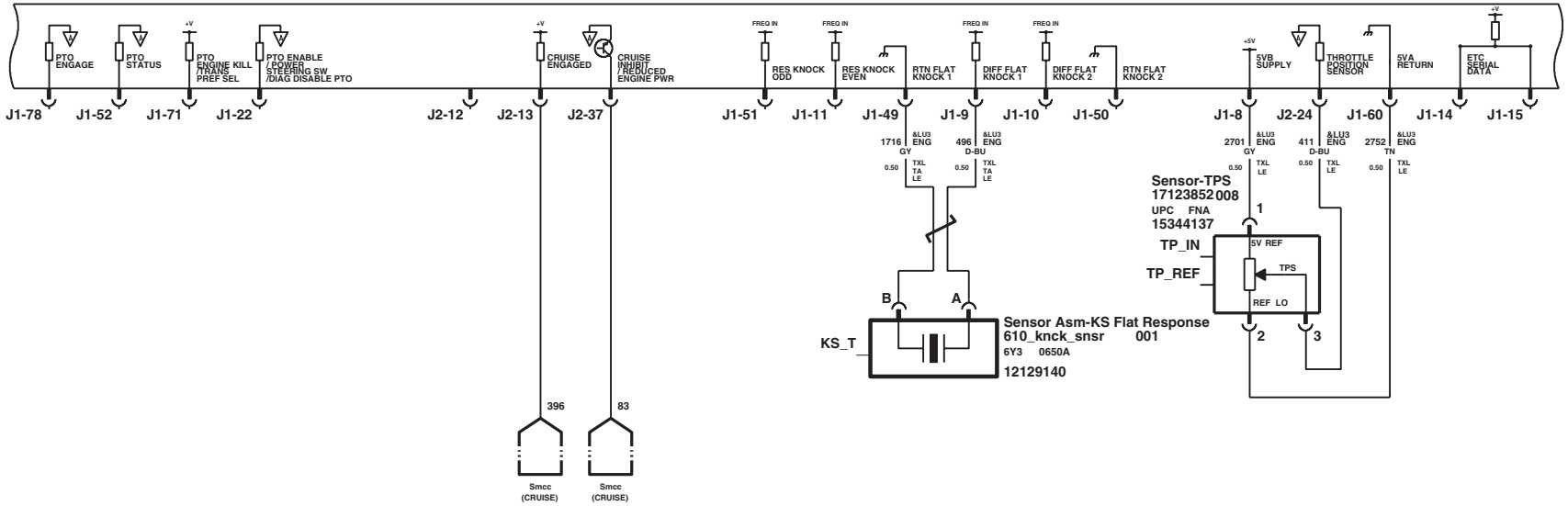

Powertrain Controls (v6 Pcm)	OBJECT ID	REVISION	STAGE	VERSION	LAST CHANGED BY	ORGANIZATION
GMT610 06 G_Van &LU3	826020a	002	X			GMT610
Panel Set: 4 schematic sheet1 8	$IVEDWORK/826020a__002				Monday, December 1, 2003 5:22:29 pm	Panel Set: 4

Powertrain Controls (V6 PCM)

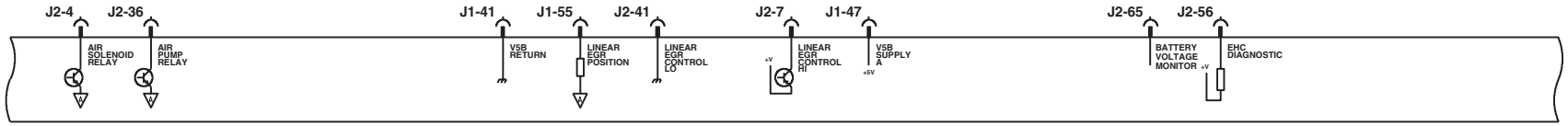

Powertrain Controls (v6 Pcm)	OBJECT ID	REVISION	STAGE	VERSION	LAST CHANGED BY	ORGANIZATION
GMT610 06 G_Van &LU3	826020a	002	X			GMT610
Panel Set: 5 schematic sheet1 $ 8	IVEDWORK/826020a__002				Monday, December 1, 2003 5:22:29 pm	Panel Set: 5

Powertrain Controls (V6 PCM)

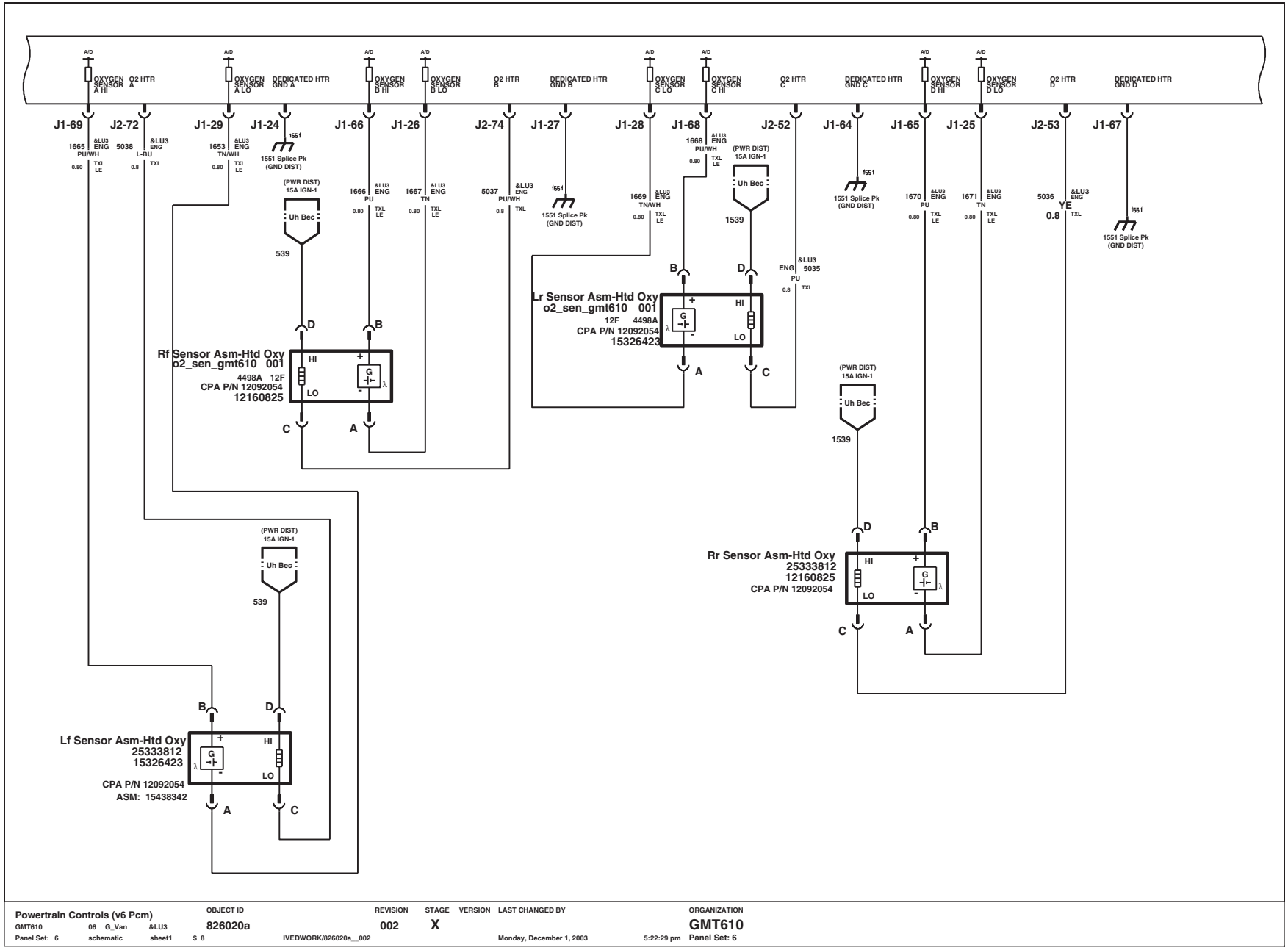

Powertrain Controls (V6 PCM)

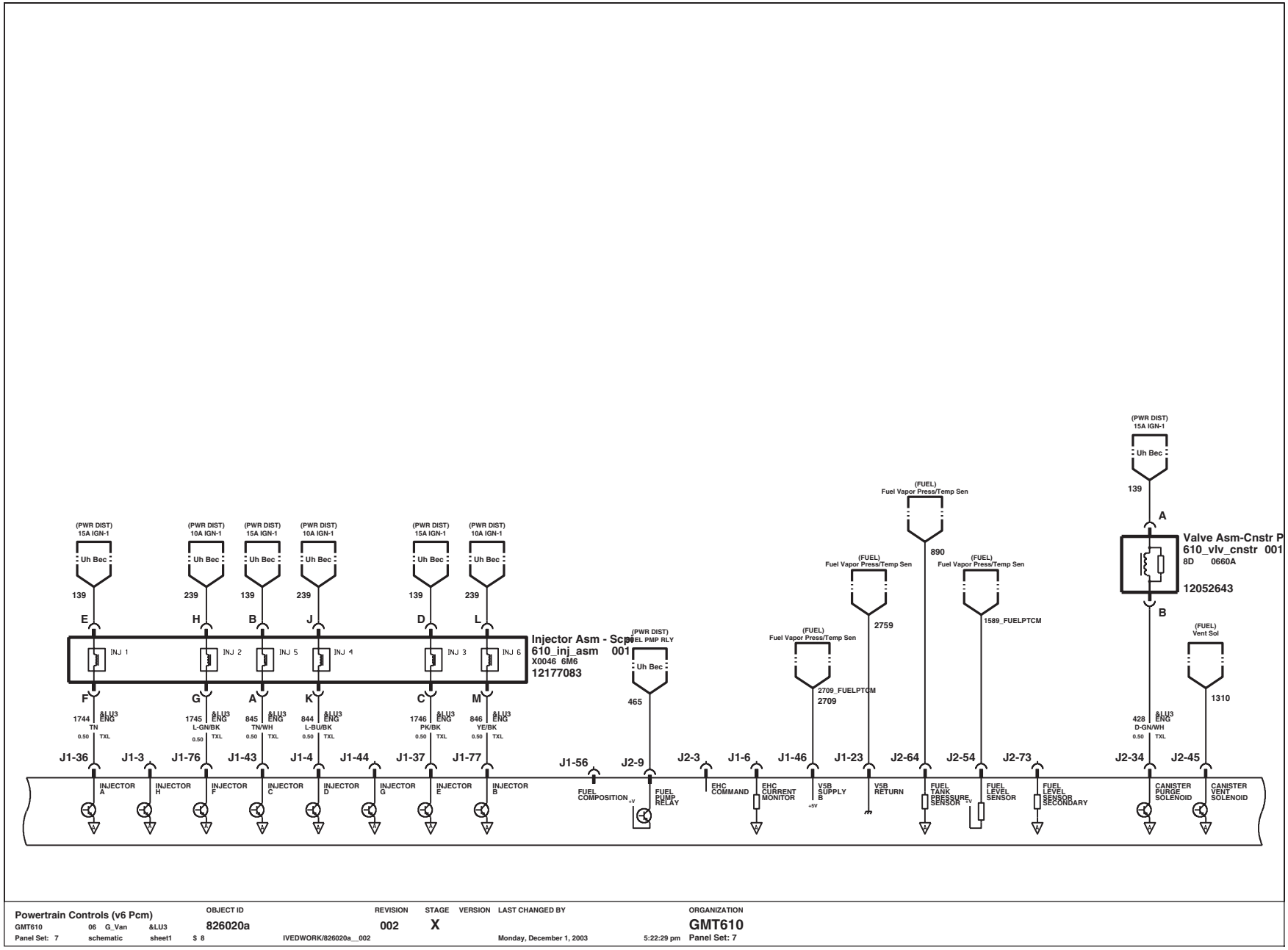

Powertrain Controls (V6 PCM)

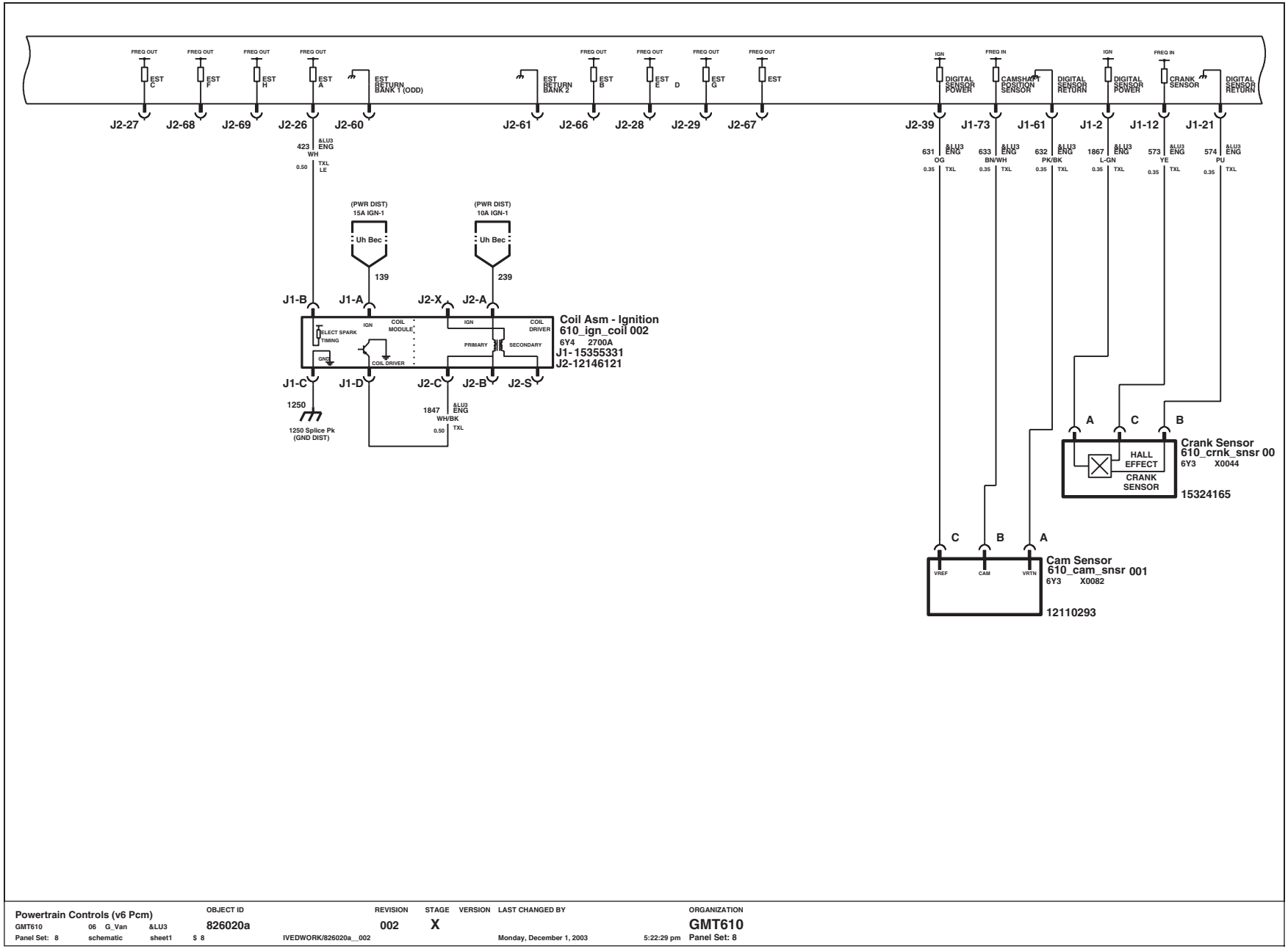

Powertrain Controls (V6 PCM)

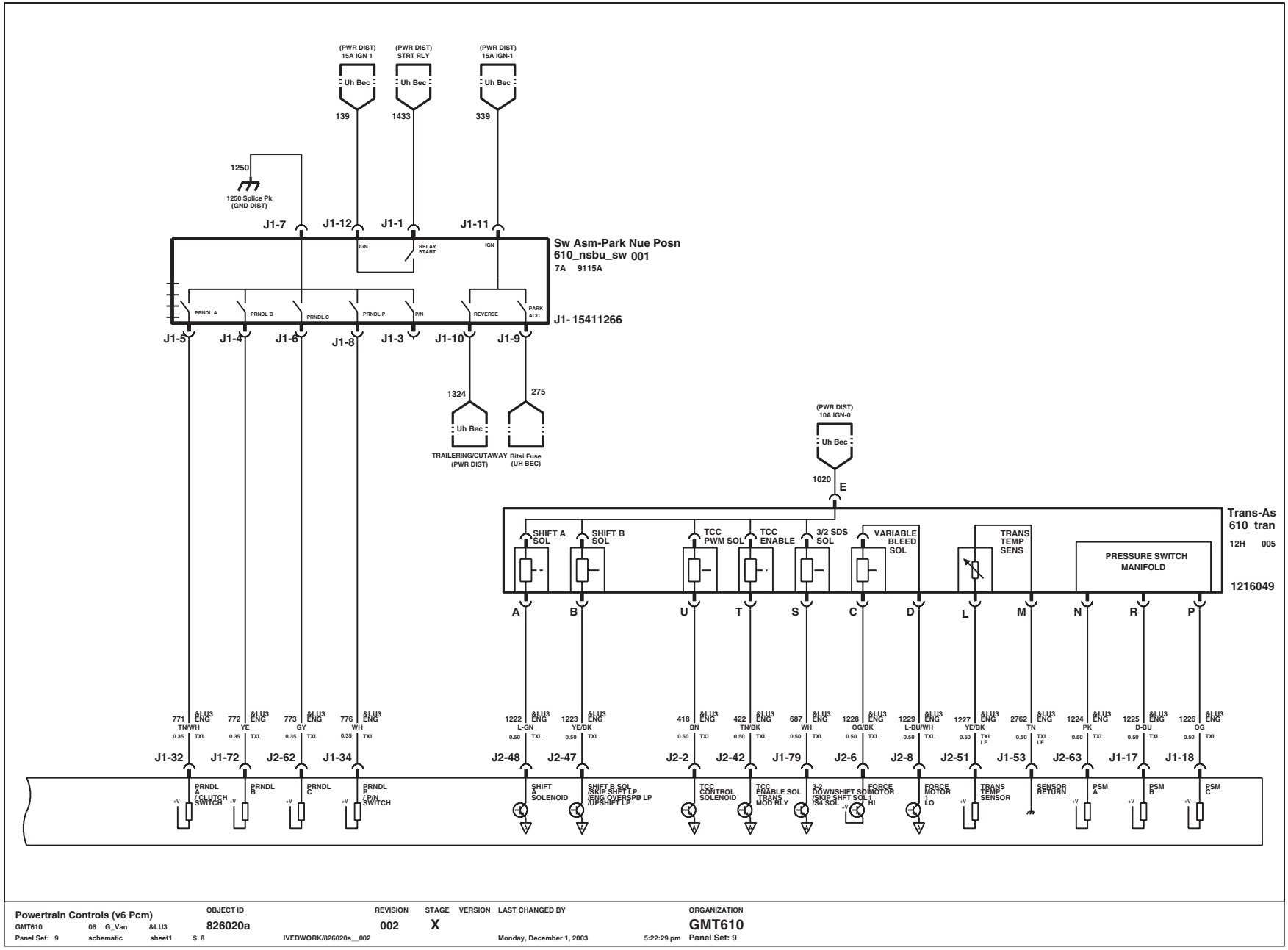

Powertrain Controls (V6 PCM)

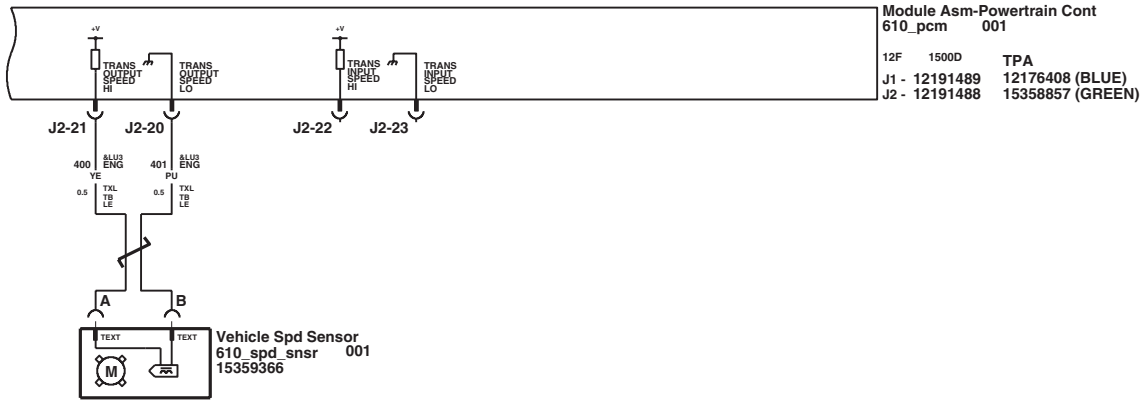

Powertrain Controls (v6 Pcm)	OBJECT ID	REVISION	STAGE	VERSION	LAST CHANGED BY	ORGANIZATION
GMT610 06 G_Van &LU3	826020a	002	X			GMT610
Panel Set: 10 schematic sheet1 $ 8	IVEDWORK/826020a__002				Monday, December 1, 2003 5:22:29 pm	Panel Set: 10

Powertrain Controls (Diesel LLY V8)

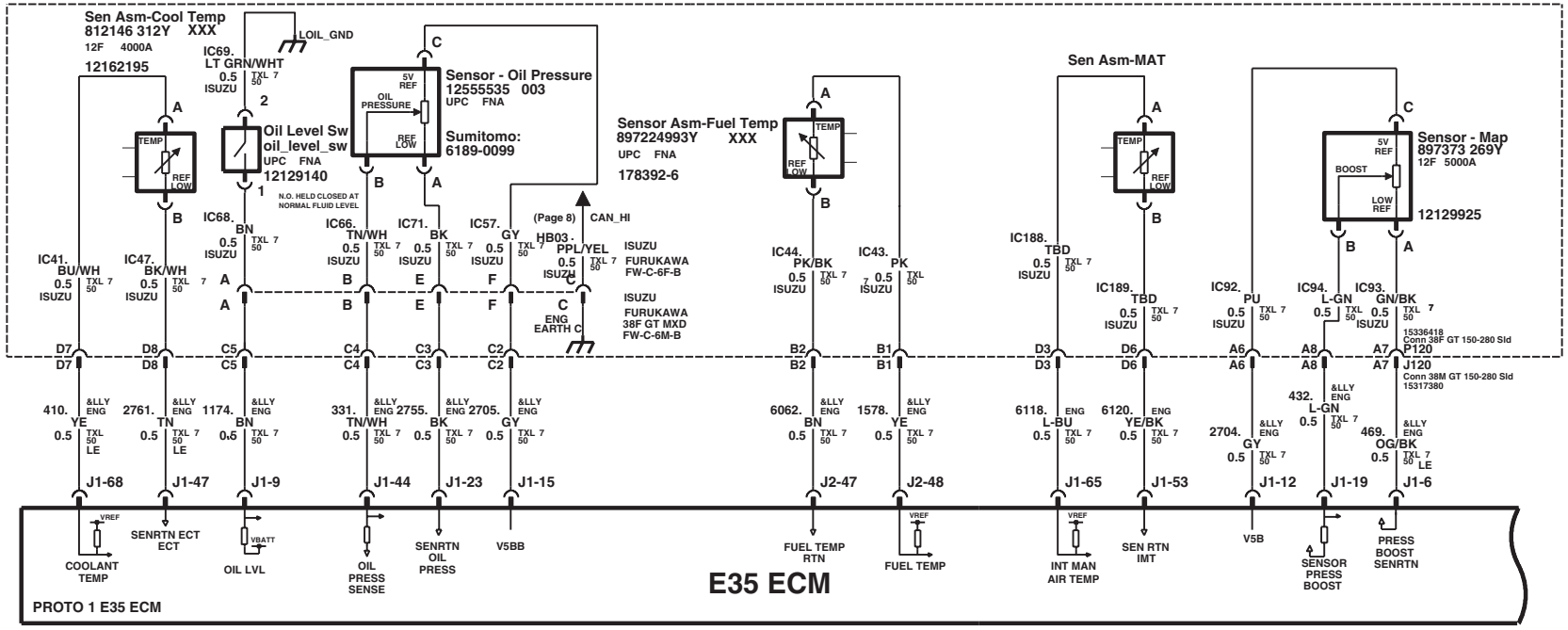

Powertrain Controls (diesel Lly V8)	OBJECT ID	REVISION	STAGE	VERSION	LAST CHANGED BY	ORGANIZATION
GMT610 06 G_Van	826020c	005	X			GMT610
Panel Set: 1 schematic sheet1 $ 19	IVEDWORK/826020c__005				Tuesday, September 14, 2004 6:56:54 pm	

Powertrain Controls (Diesel LLY V8)

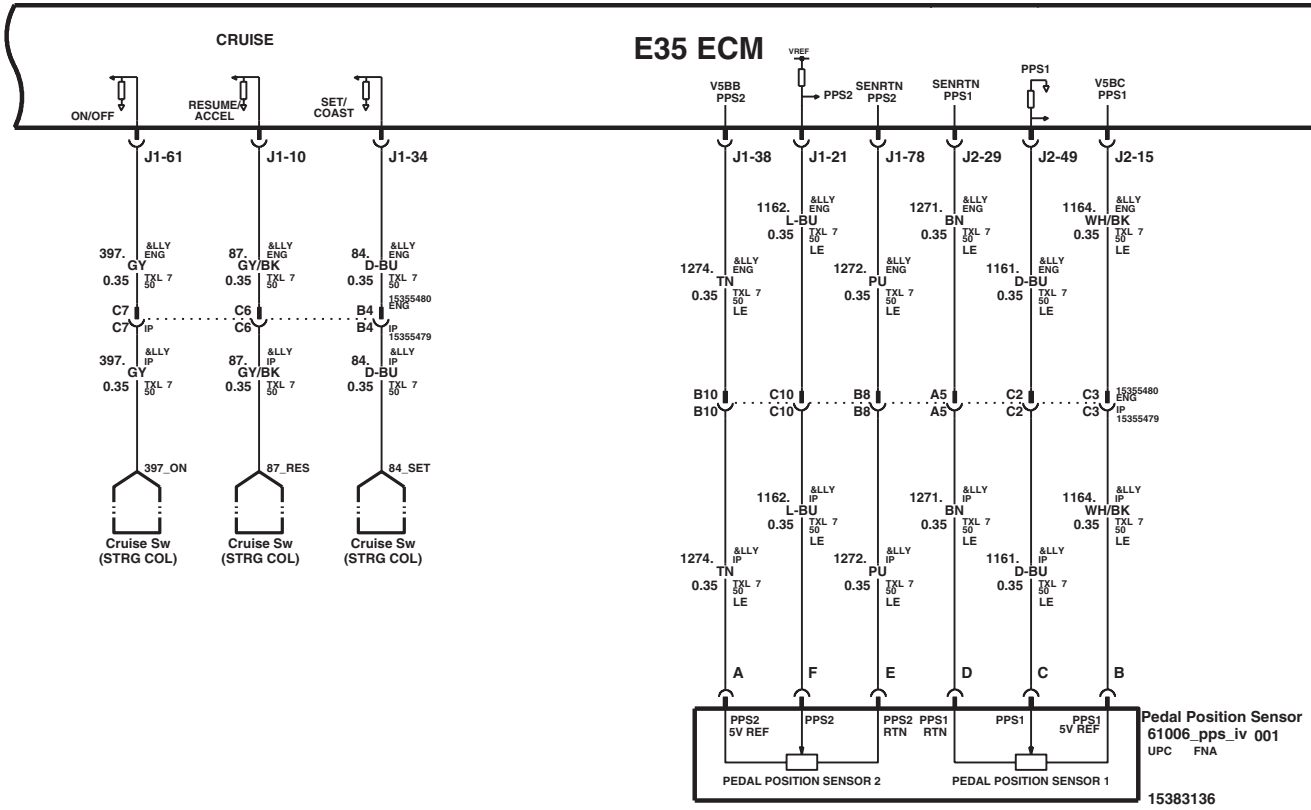

NOTE 2: KEEP 1161 & 1162 AWAY FROM 12V LINES IN UNSEALED CONNECTOR

Powertrain Controls (diesel Lly V8)	OBJECT ID	REVISION	STAGE	VERSION	LAST CHANGED BY	ORGANIZATION
GMT610 06 G_Van	826020c	005	X			GMT610
Panel Set: 2 schematic sheet1 $ 19	IVEDWORK/826020c__005				Tuesday, September 14, 2004 6:56:54 pm	

Powertrain Controls (Diesel LLY V8)

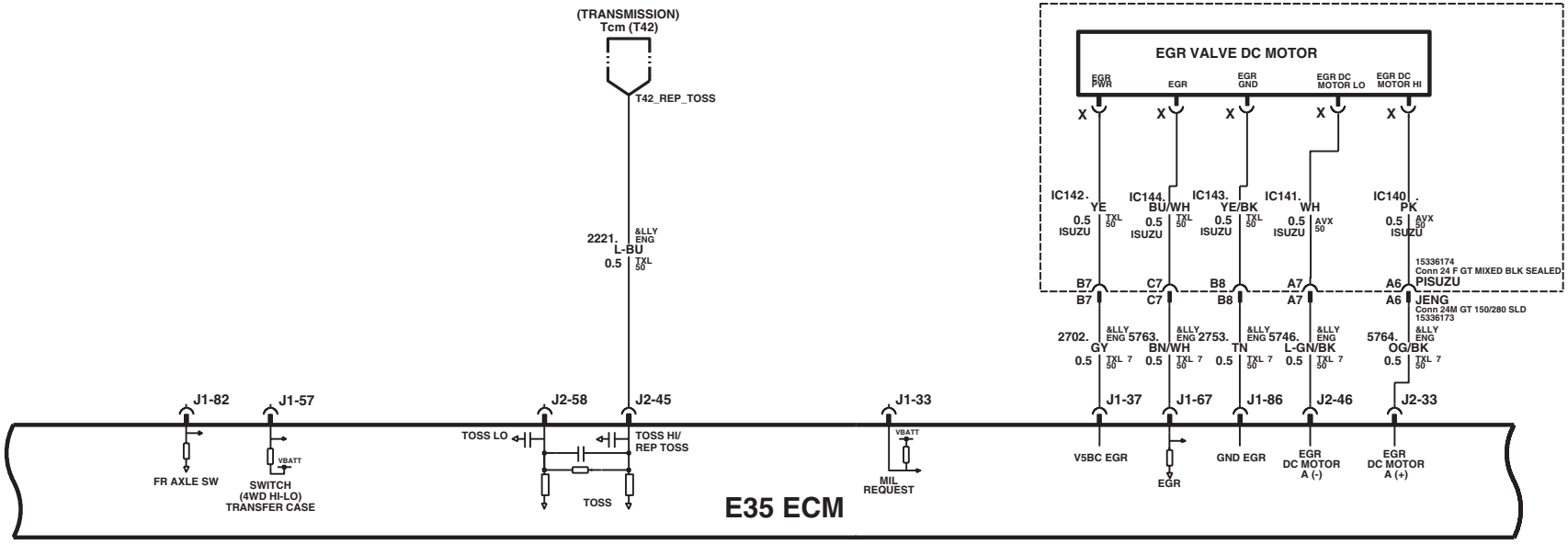

Powertrain Controls (diesel Lly V8)	OBJECT ID	REVISION	STAGE	VERSION	LAST CHANGED BY	ORGANIZATION
GMT610 06 G_Van	826020c	005	X			GMT610
Panel Set: 3 schematic sheet1 $ 19	IVEDWORK/826020c__005				Tuesday, September 14, 2004 6:56:54 pm	

Powertrain Controls (Diesel LLY V8)

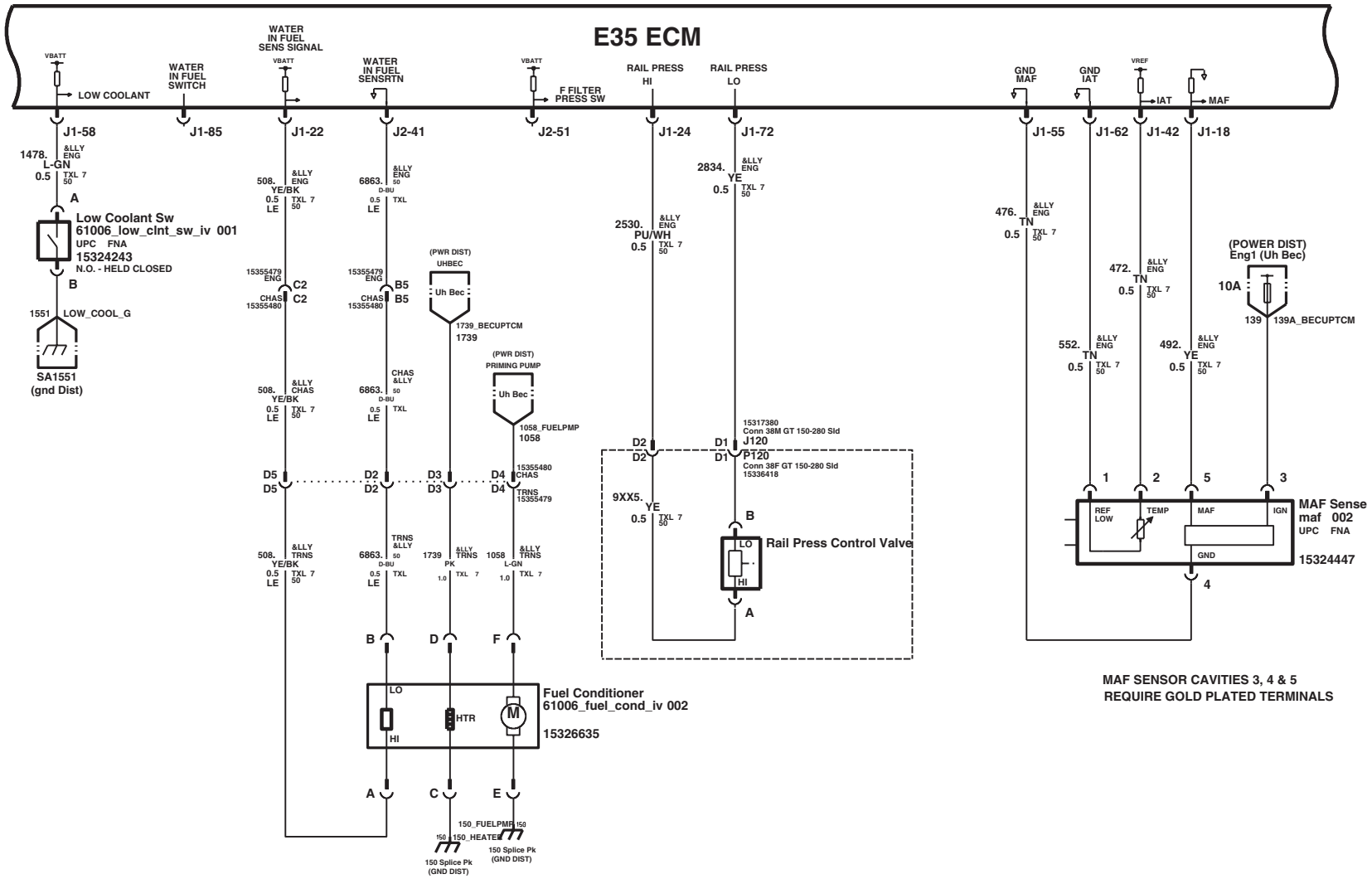

PRELIMINARY

Powertrain Controls (diesel Lly V8)	OBJECT ID	REVISION	STAGE	VERSION	LAST CHANGED BY	ORGANIZATION
GMT610 06 G_Van	826020c	005	X			GMT610
Panel Set: 4 schematic sheet1 $ 19	IVEDWORK/826020c__005				Tuesday, September 14, 2004 6:56:54 pm	

Powertrain Controls (Diesel LLY V8)

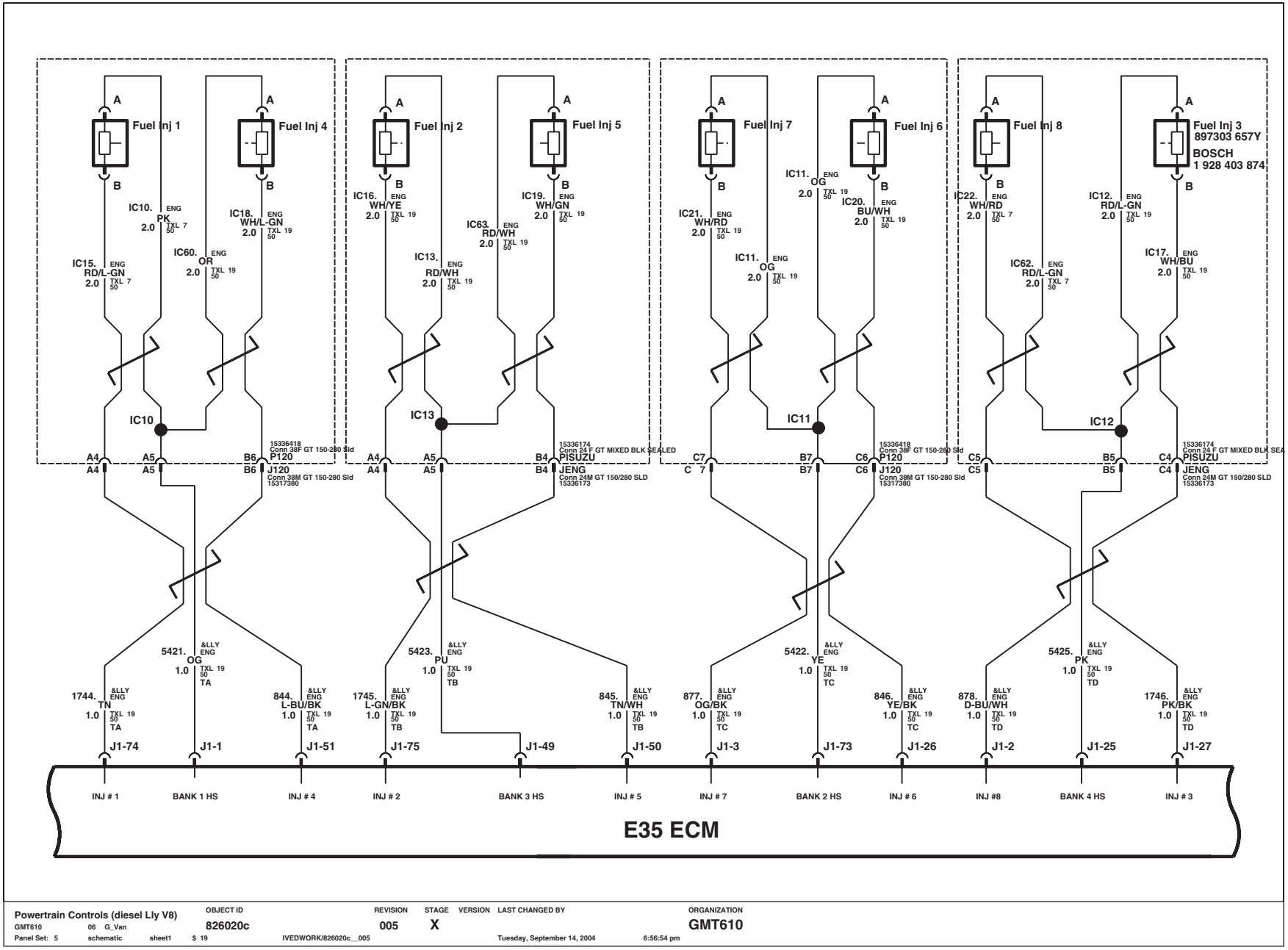

Powertrain Controls (diesel Lly V8)
GMT610 06 G_Van
Panel Set: 5 schematic sheet1 $ 19

OBJECT ID	REVISION	STAGE	VERSION	LAST CHANGED BY	ORGANIZATION
826020c	005	X			GMT610

IVEDWORK/826020c__005 Tuesday, September 14, 2004 6:56:54 pm

Powertrain Controls (Diesel LLY V8)

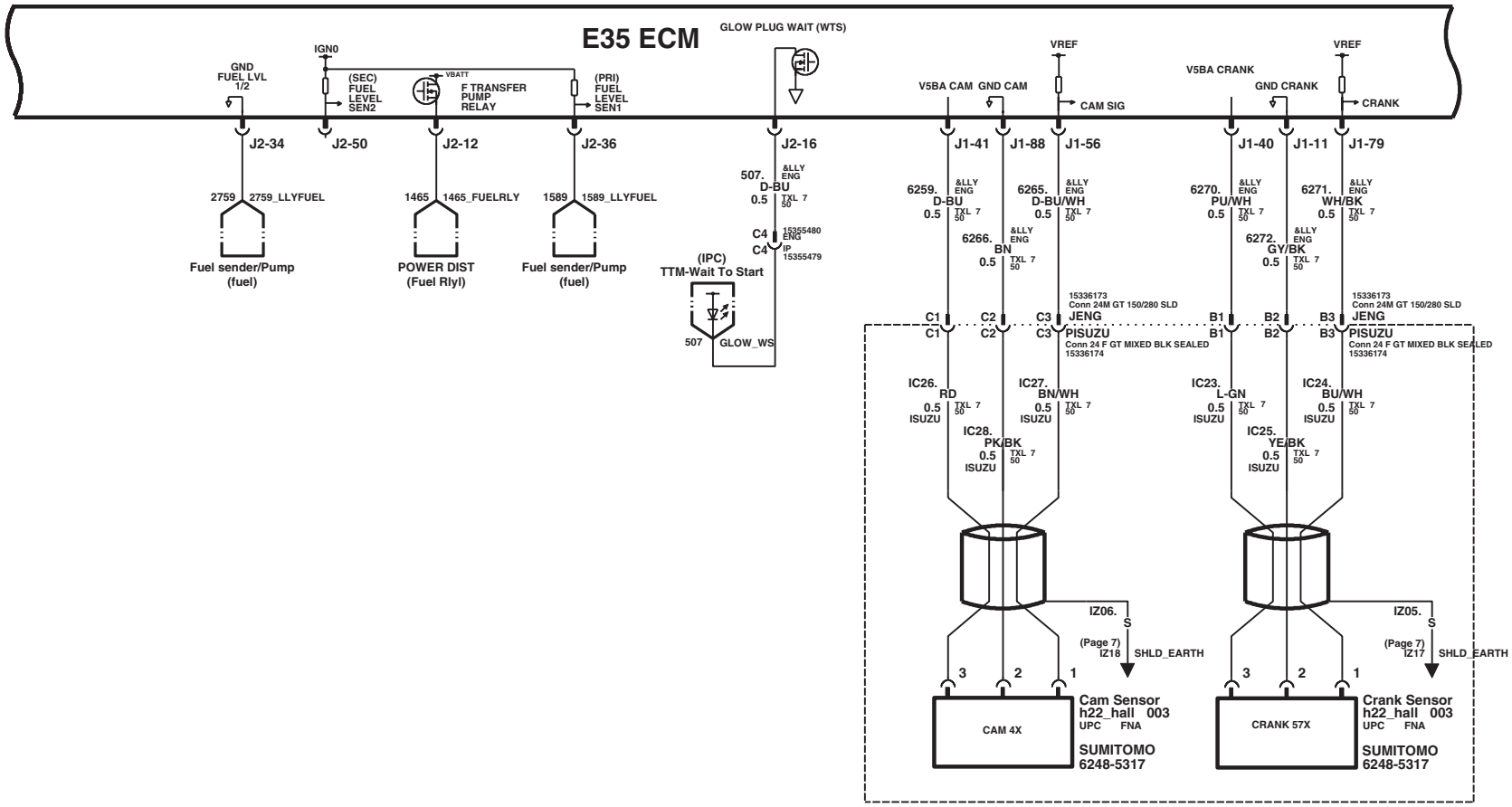

Powertrain Controls (diesel Lly V8)	OBJECT ID	REVISION	STAGE	VERSION	LAST CHANGED BY	ORGANIZATION
GMT610 06 G_Van	826020c	005	X			GMT610
Panel Set: 6 schematic sheet1 $ 19	IVEDWORK/826020c__005				Tuesday, September 14, 2004 6:56:54 pm	

Powertrain Controls (Diesel LLY V8)

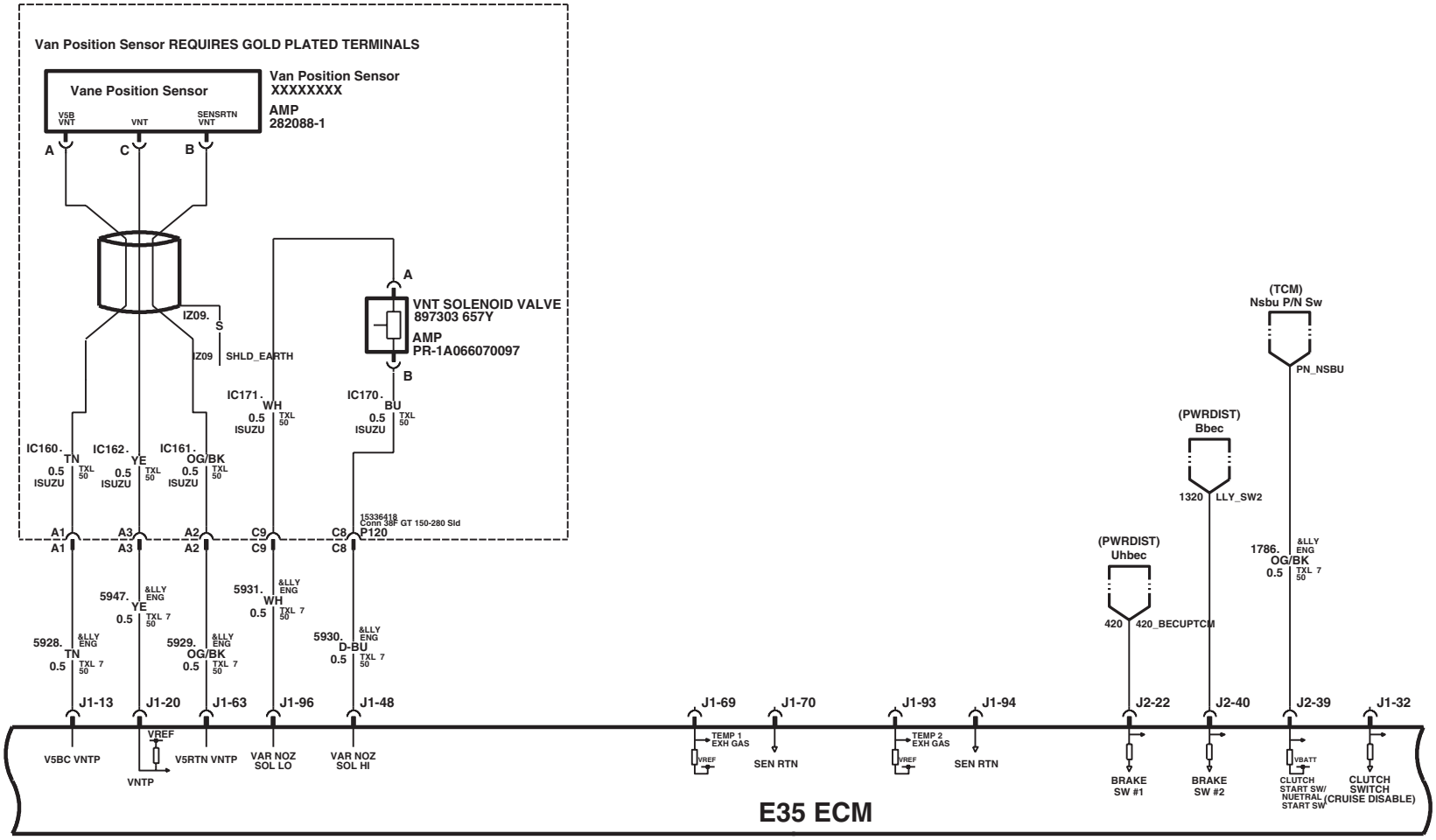

Powertrain Controls (diesel Lly V8)	OBJECT ID	REVISION	STAGE	VERSION	LAST CHANGED BY	ORGANIZATION
GMT610 06 G_Van	826020c	005	X			GMT610
Panel Set: 7 schematic sheet1 $ 19	IVEDWORK/826020c__005				Tuesday, September 14, 2004 6:56:54 pm	

Powertrain Controls (Diesel LLY V8)

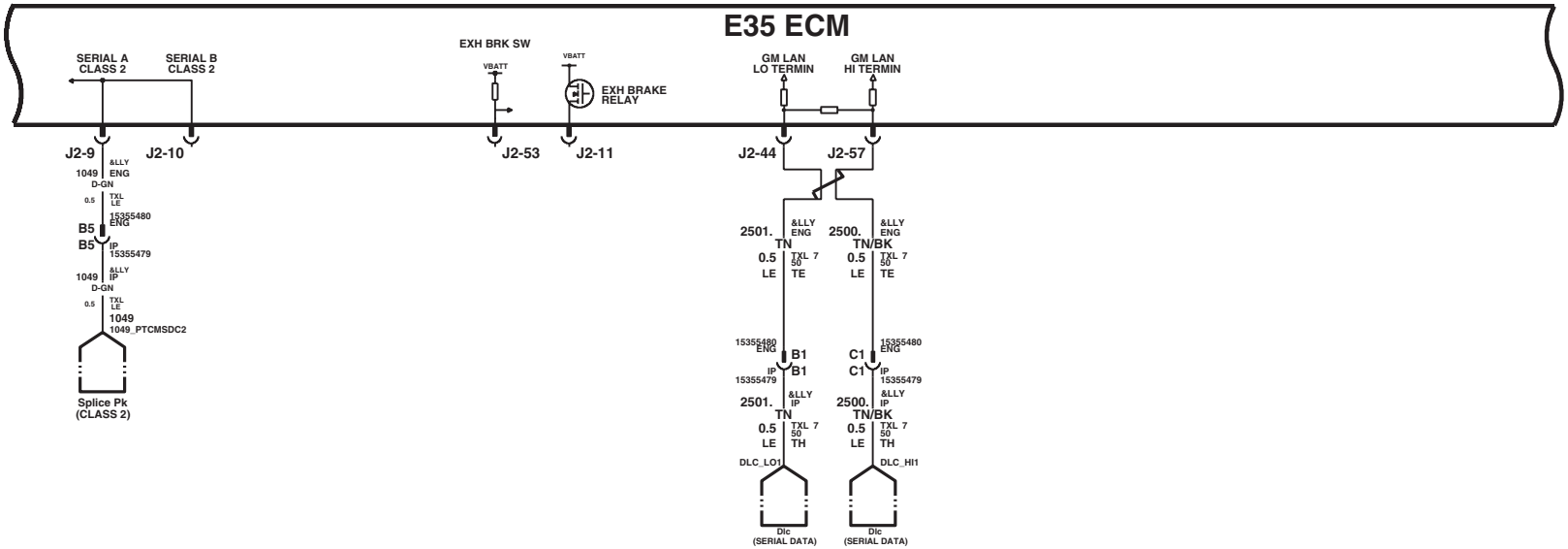

Powertrain Controls (diesel Lly V8)	OBJECT ID	REVISION	STAGE	VERSION	LAST CHANGED BY	ORGANIZATION
GMT610 06 G_Van	826020c	005	X			GMT610
Panel Set: 8 schematic sheet1 $ 19	IVEDWORK/826020c__005				Tuesday, September 14, 2004 6:56:54 pm	

Powertrain Controls (Diesel LLY V8)

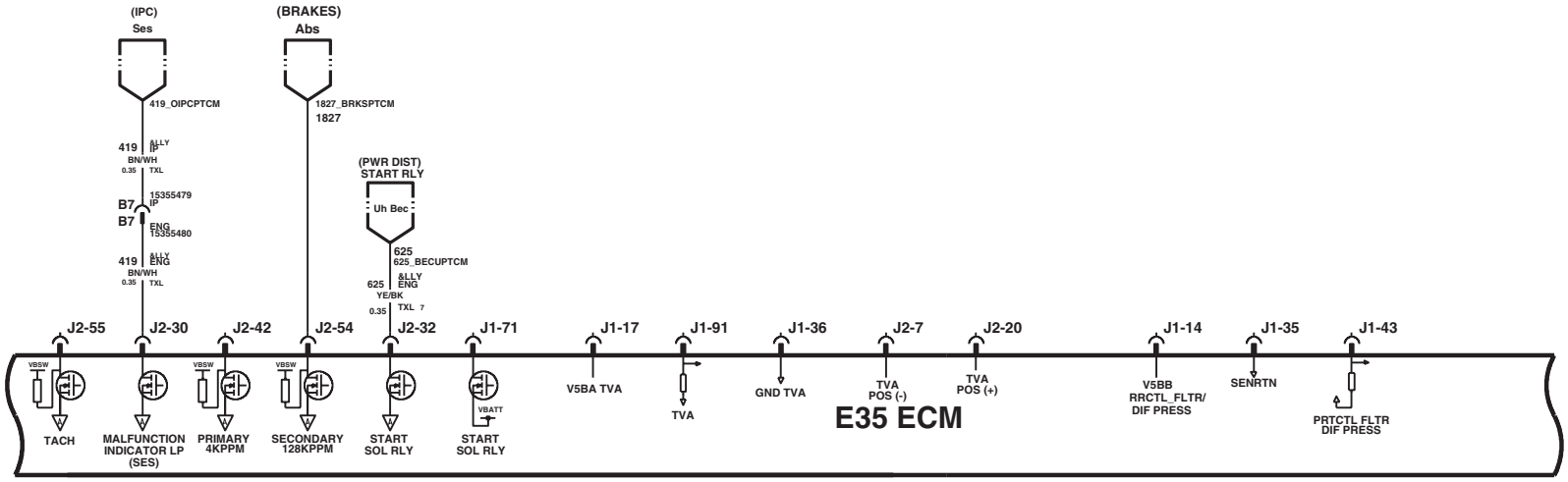

Powertrain Controls (diesel Lly V8)	OBJECT ID	REVISION	STAGE	VERSION	LAST CHANGED BY	ORGANIZATION
GMT610 06 G_Van	826020c	005	X			GMT610
Panel Set: 9 schematic sheet1 $ 19	IVEDWORK/826020c__005				Tuesday, September 14, 2004 6:56:54 pm	

Powertrain Controls (Diesel LLY V8)

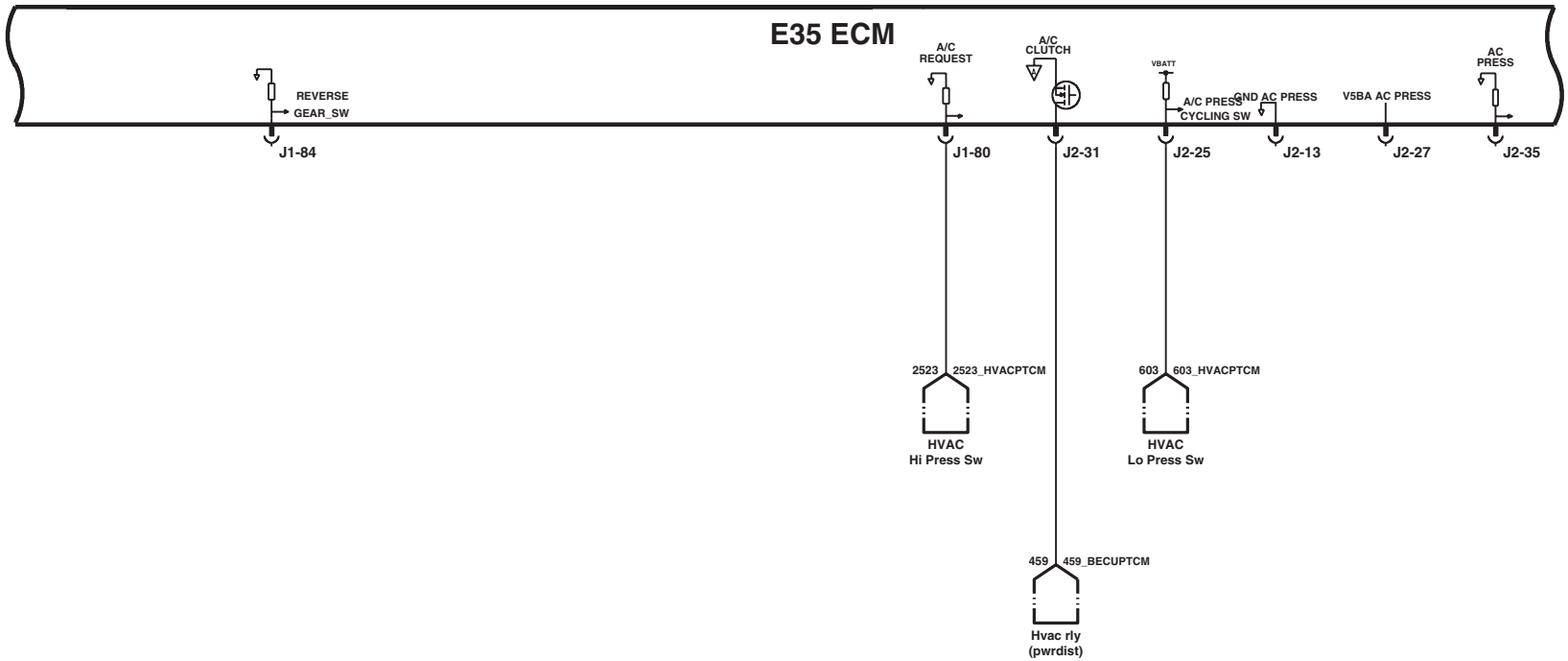

Powertrain Controls (diesel Lly V8)	OBJECT ID	REVISION	STAGE	VERSION	LAST CHANGED BY	ORGANIZATION
GMT610 06 G_Van	826020c	005	X			GMT610
Panel Set: 10 schematic sheet1 $ 19	IVEDWORK/826020c__005				Tuesday, September 14, 2004 6:56:54 pm	

Powertrain Controls (Diesel LLY V8)

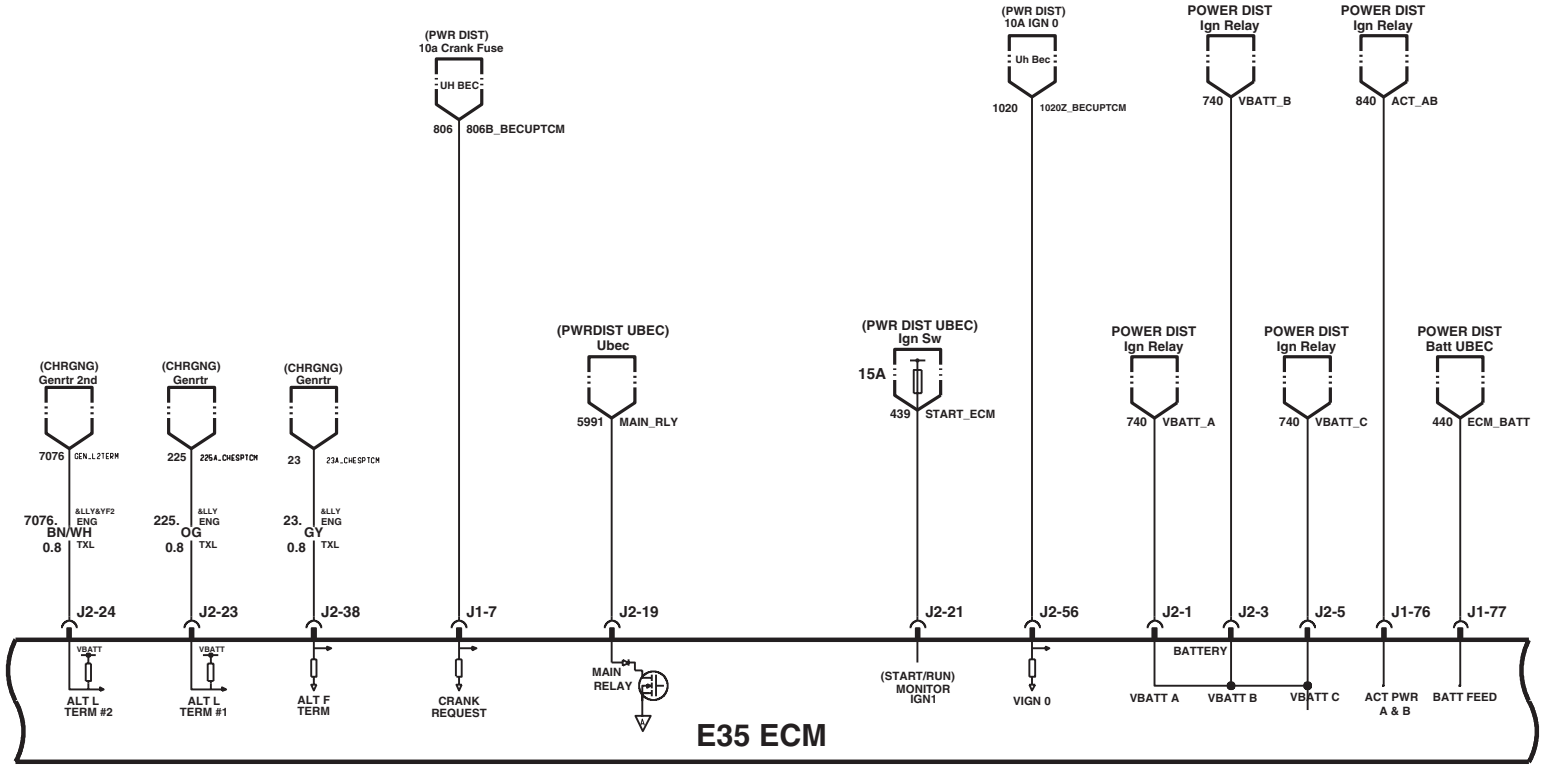

Powertrain Controls (diesel Lly V8)	OBJECT ID	REVISION	STAGE	VERSION	LAST CHANGED BY	ORGANIZATION
GMT610 06 G_Van	826020c	005	X			GMT610
Panel Set: 11 schematic sheet1 $ 19	IVEDWORK/826020c__005				Tuesday, September 14, 2004 6:56:54 pm	

Powertrain Controls (Diesel LLY V8)

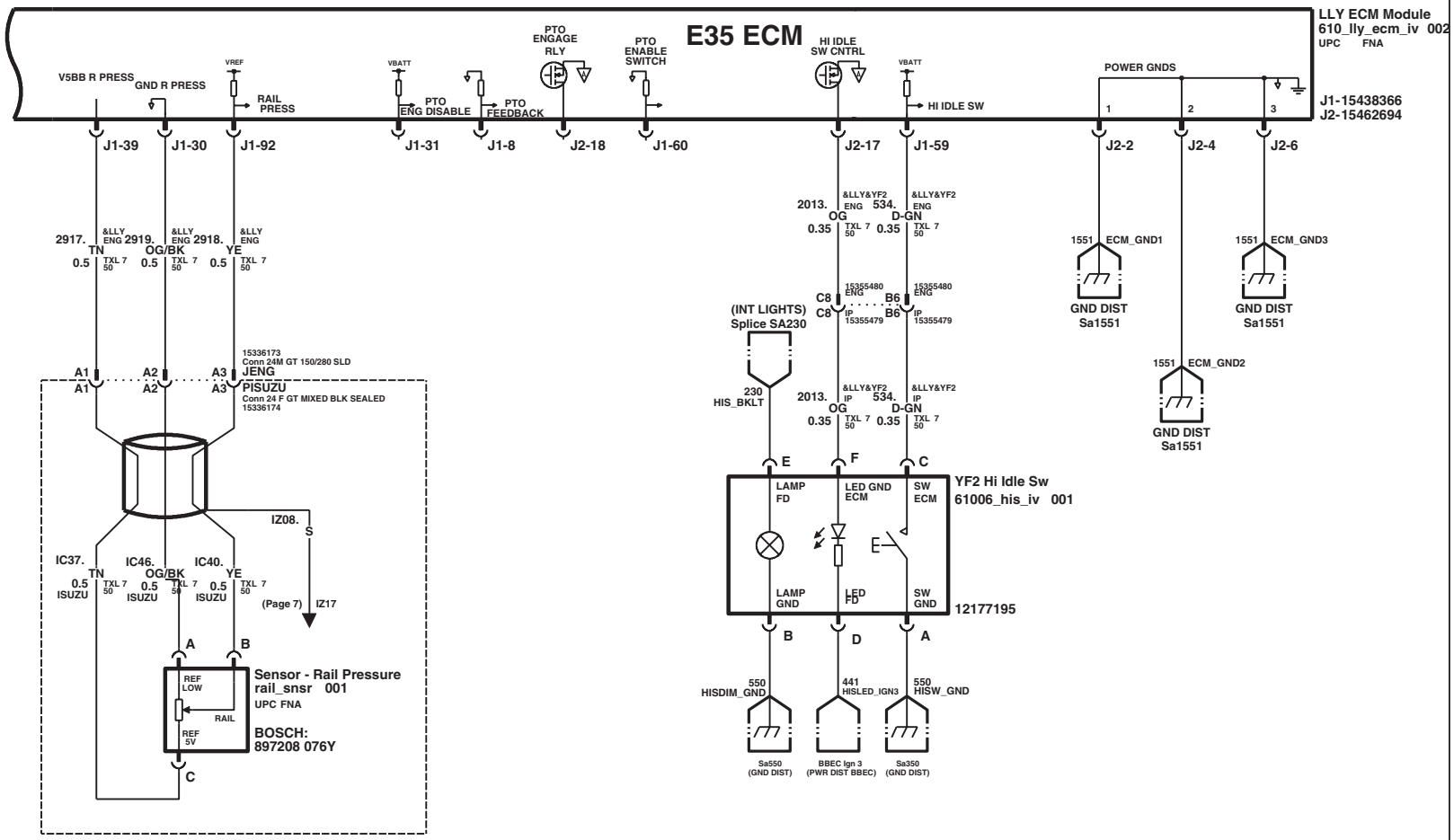

E 35 C-SAMPLE WILL HAVE ALL SILVER PLATED PINS. PLATFORM TO ENSURE THAT ALL MATING PINS FOR THE C-SAMPLE ARE SILVER PLATED

C-SAMPLE WILL BE AVAILABLE 2ND WEEK OF APRIL

Powertrain Controls (diesel Lly V8)	OBJECT ID	REVISION	STAGE	VERSION	LAST CHANGED BY	ORGANIZATION
GMT610 06 G_Van	826020c	005	X			GMT610
Panel Set: 12 schematic sheet1 $ 19	IVEDWORK/826020c__005				Tuesday, September 14, 2004 6:56:54 pm	

Powertrain Controls (Diesel LLY V8)

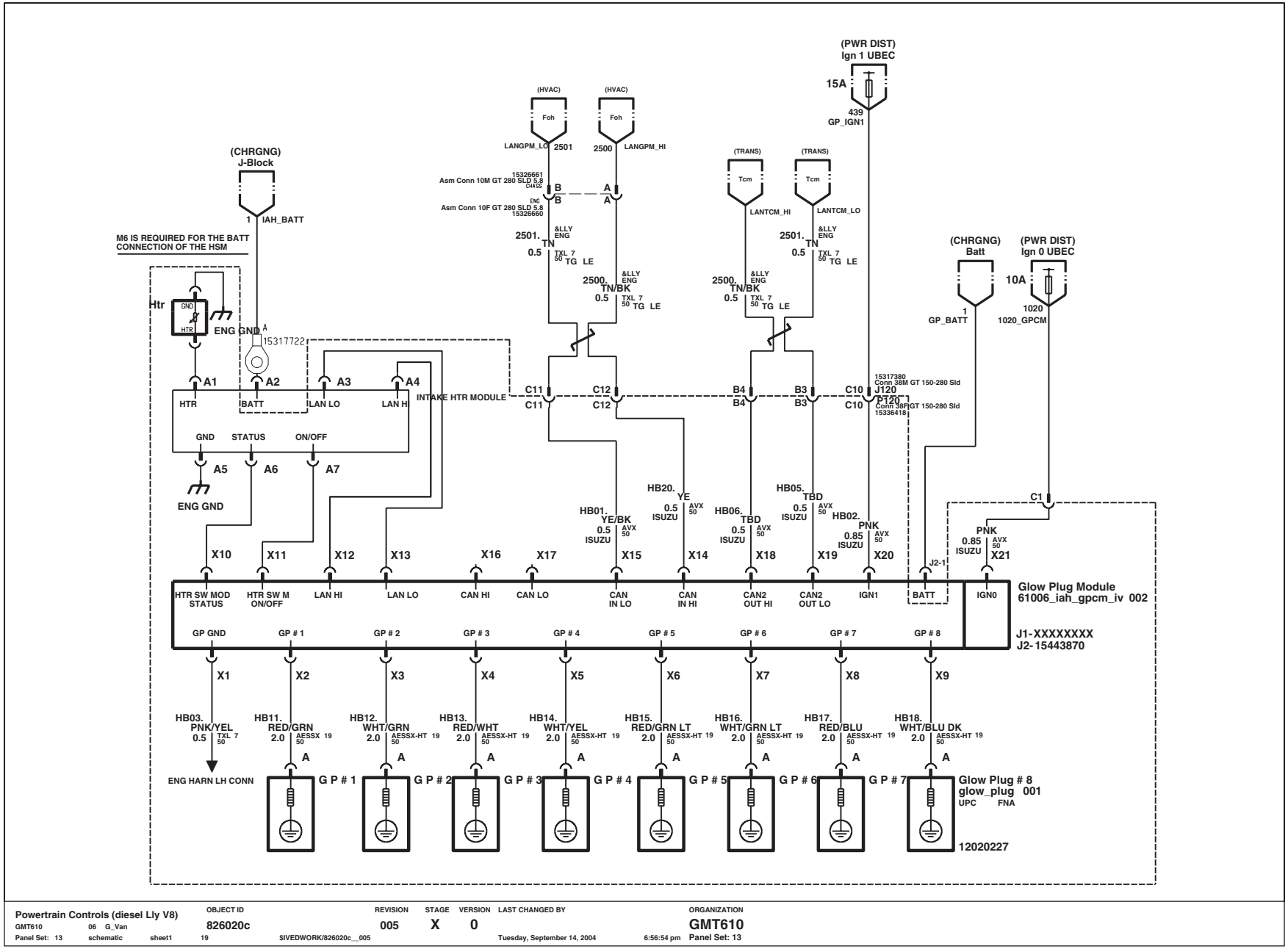

Powertrain Controls (diesel Lly V8)	OBJECT ID	REVISION	STAGE	VERSION	LAST CHANGED BY	ORGANIZATION
GMT610 06 G_Van	826020c	005	X	0		GMT610
Panel Set: 13 schematic sheet1 19	$IVEDWORK/826020c__005				Tuesday, September 14, 2004 6:56:54 pm	Panel Set: 13

Fuel

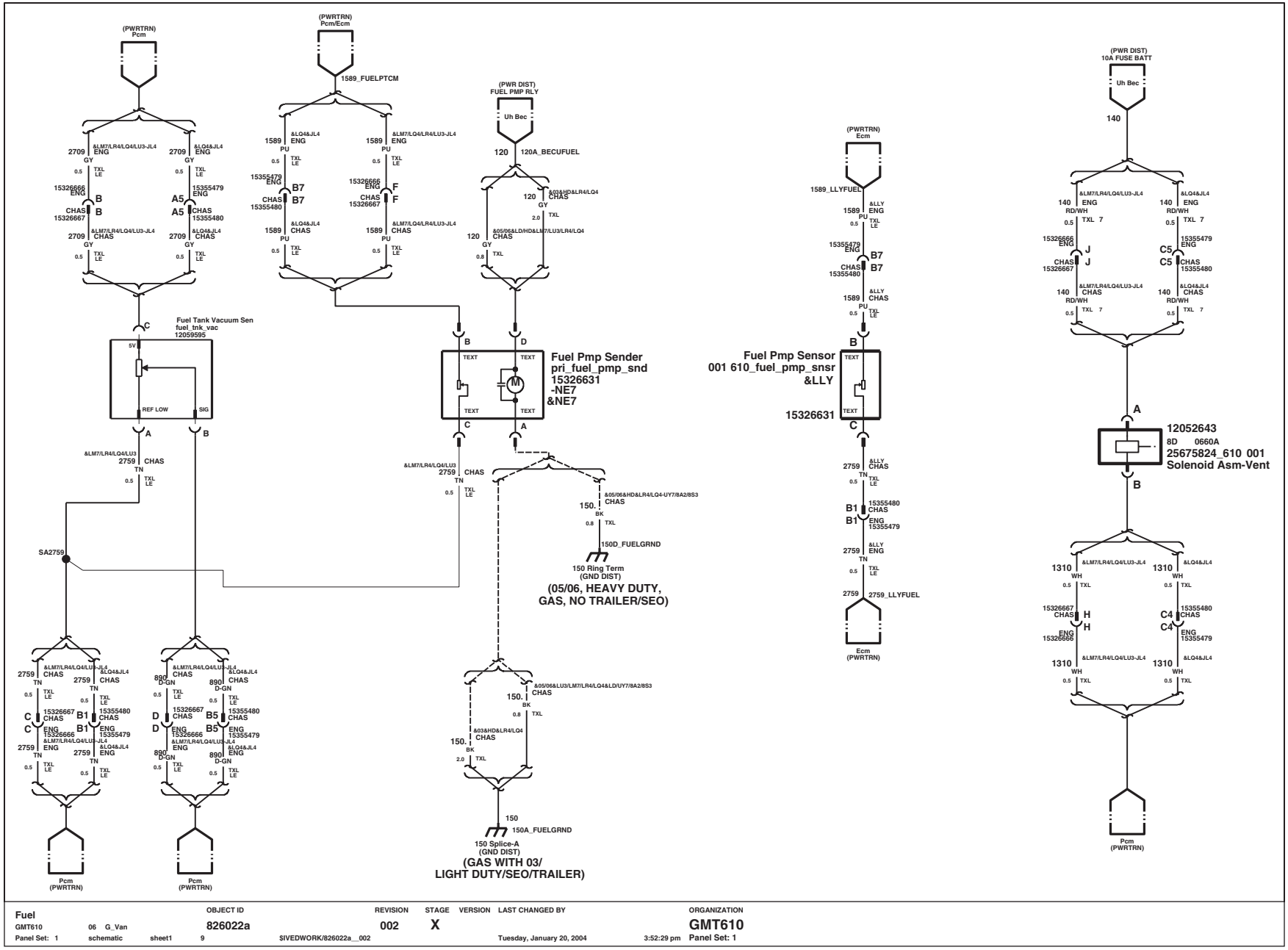

Fuel	OBJECT ID	REVISION	STAGE	VERSION	LAST CHANGED BY	ORGANIZATION
GMT610 06 G_Van	826022a	002	X			GMT610
Panel Set: 1 schematic sheet1 9	$IVEDWORK/826022a__002				Tuesday, January 20, 2004 3:52:29 pm	Panel Set: 1

LCT Transmission (LLY & T42)

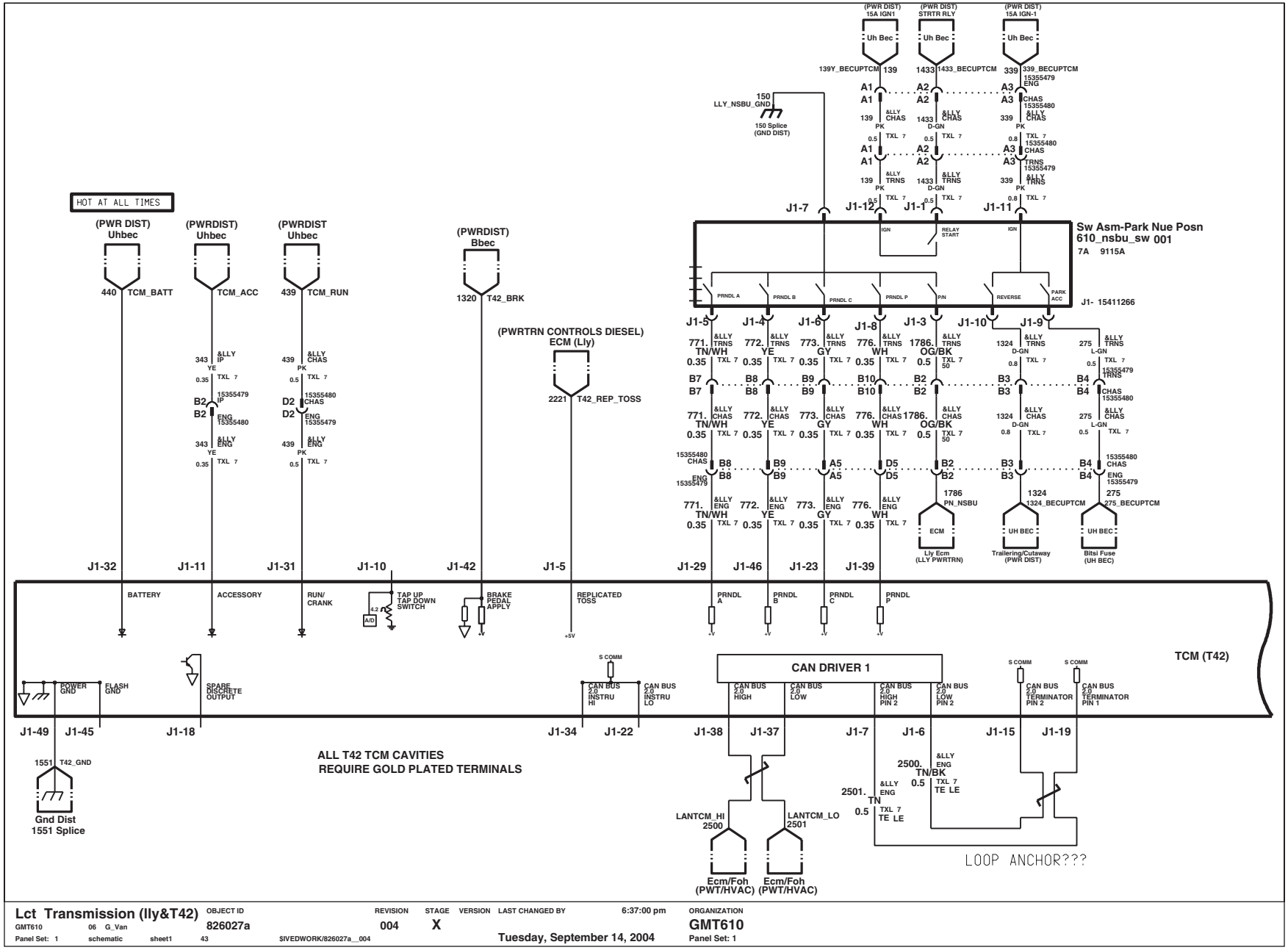

LCT Transmission (LLY & T42)

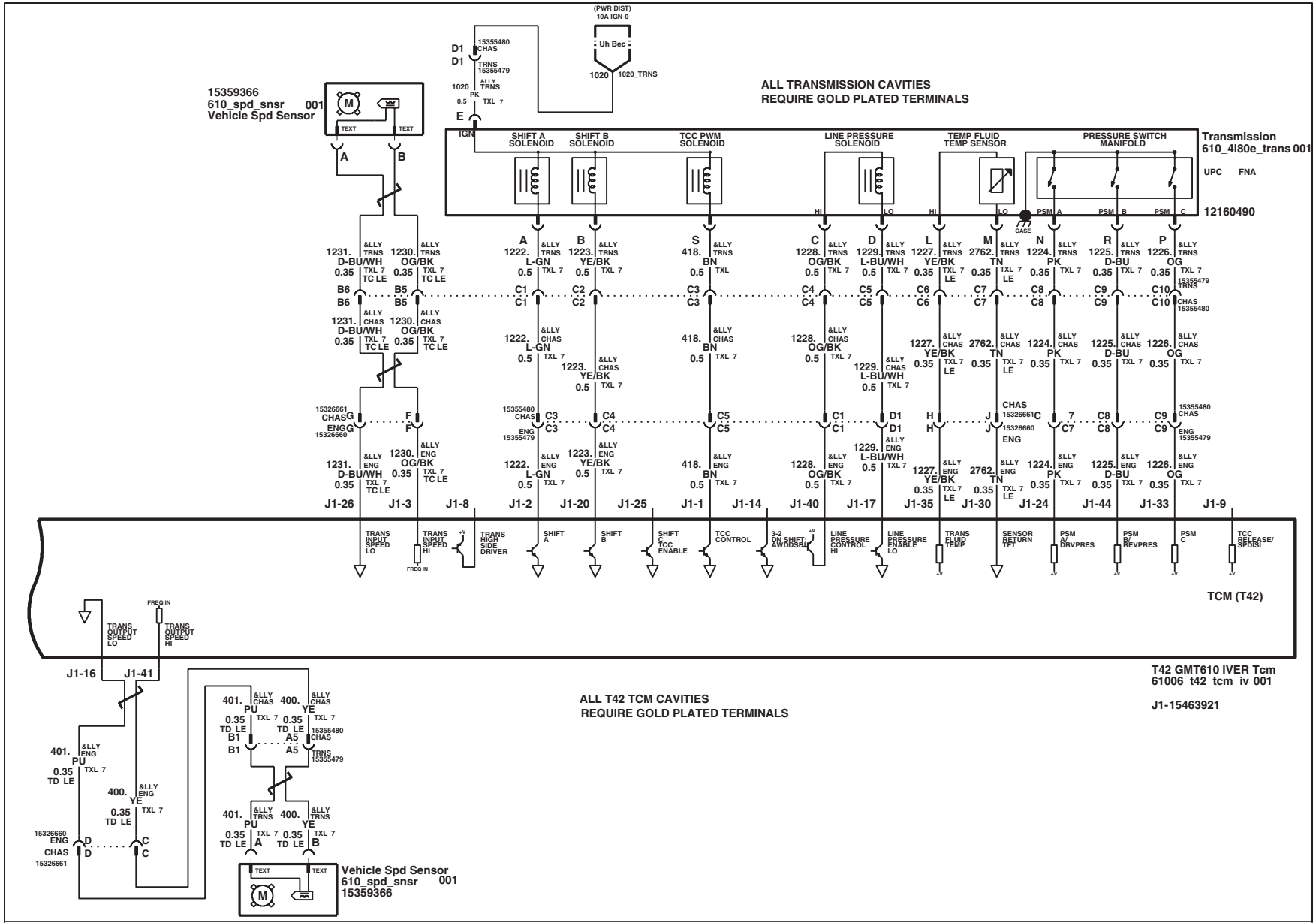

Charging & Energy Storage (BASE)

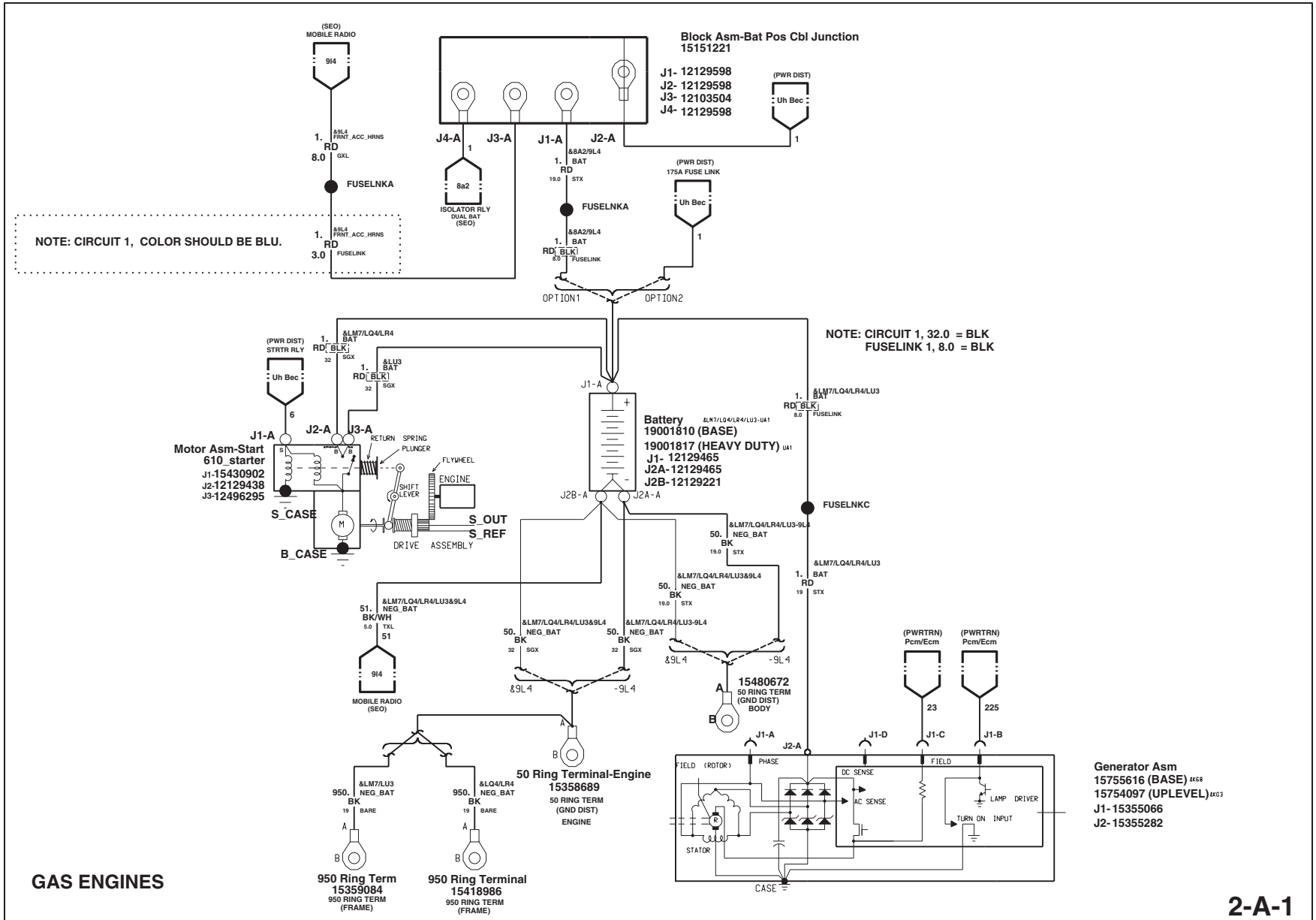

Charging & Energy Storage (LLY DIESEL)

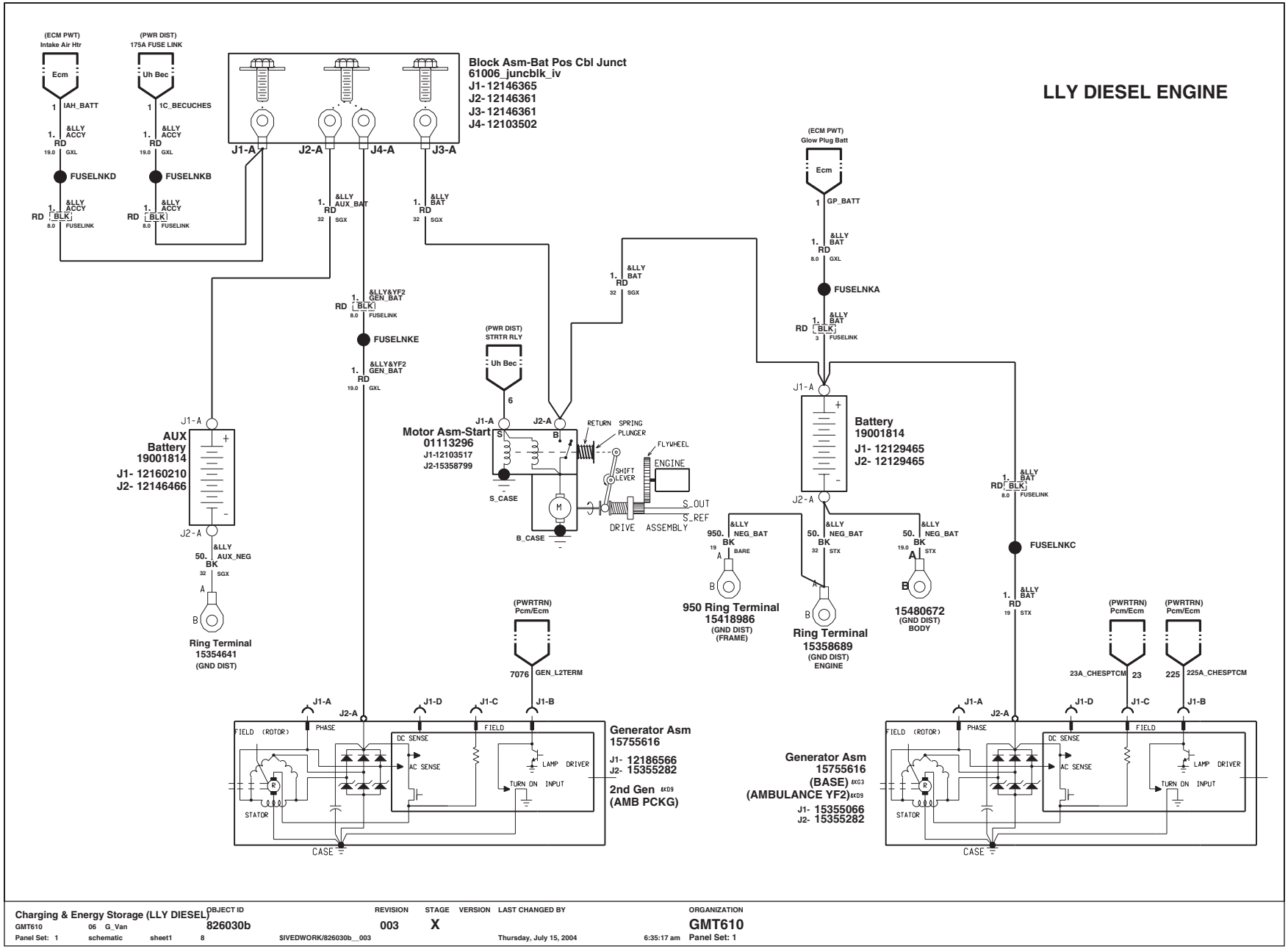

Stepper Motor Cruise Control (SMCC)

NOTE:
FOR SEO 9B9/9D4, THE ROAD SPEED GOVERNOR KIT WILL CONNECT TO THE CRUISE CONTROL CONNECTOR ON IP HARNESS

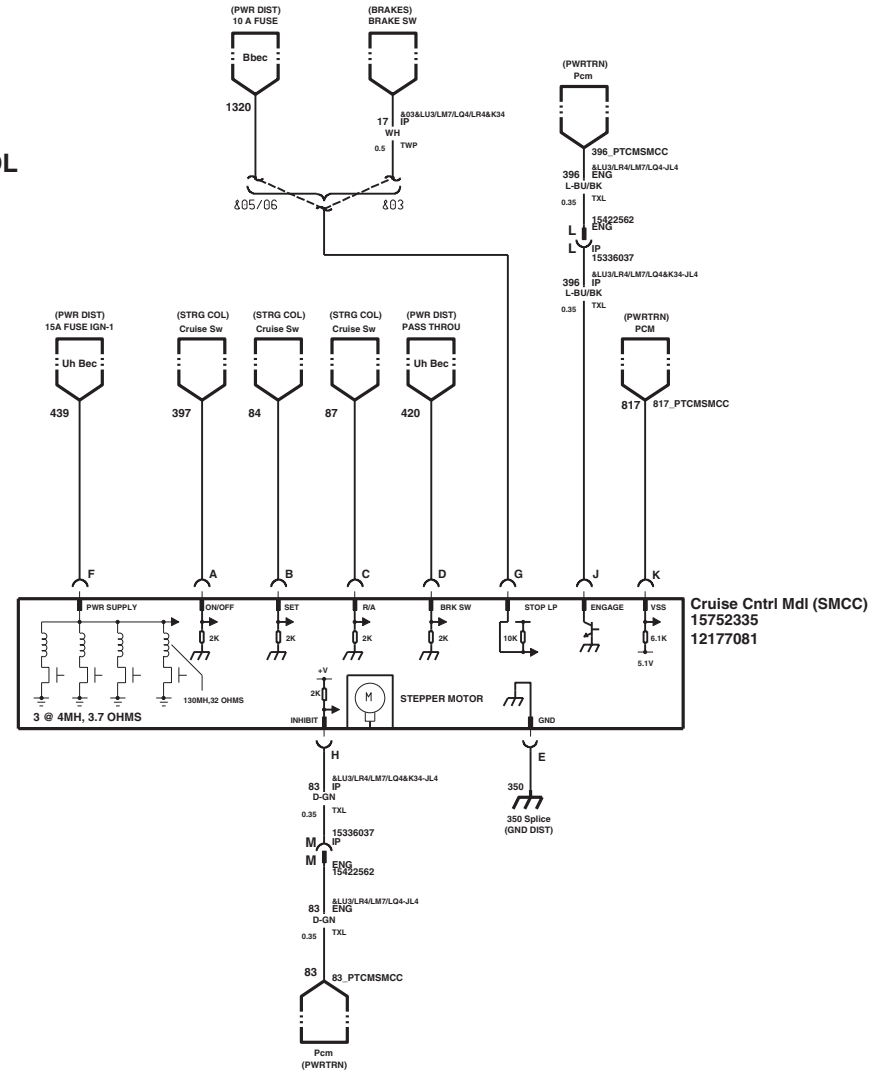

Stepper Motor Cruise Control (SMCC)	OBJECT ID	REVISION	STAGE	VERSION	LAST CHANGED BY	ORGANIZATION
GMT610 06 G_Van &LM7/LQ4/LR4/LU3	826034a	002	X			GMT610
Panel Set: 1 schematic sheet1 $ 3	IVEDWORK/826034a__002				Monday, December 1, 2003 5:55:32 pm	Panel Set: 1

Horns

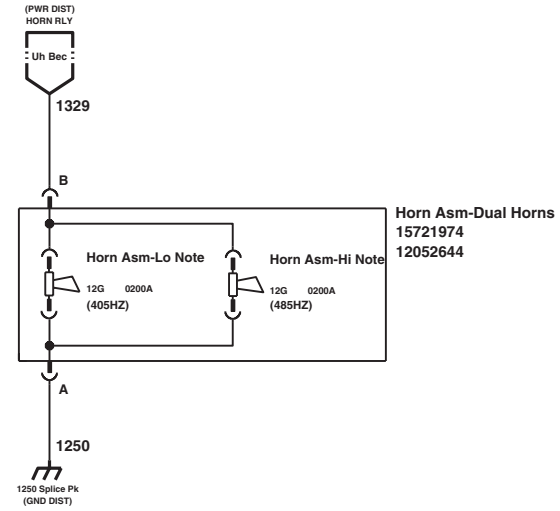

Horns	OBJECT ID	REVISION	STAGE	VERSION	LAST CHANGED BY	ORGANIZATION
GMT610 06 G_Van	826040a	002	X			GMT610
Panel Set: 1 schematic sheet1 3	$IVEDWORK/826040a__002				Monday, December 1, 2003 5:56:31 pm	Panel Set: 1

Brakes (ABS)

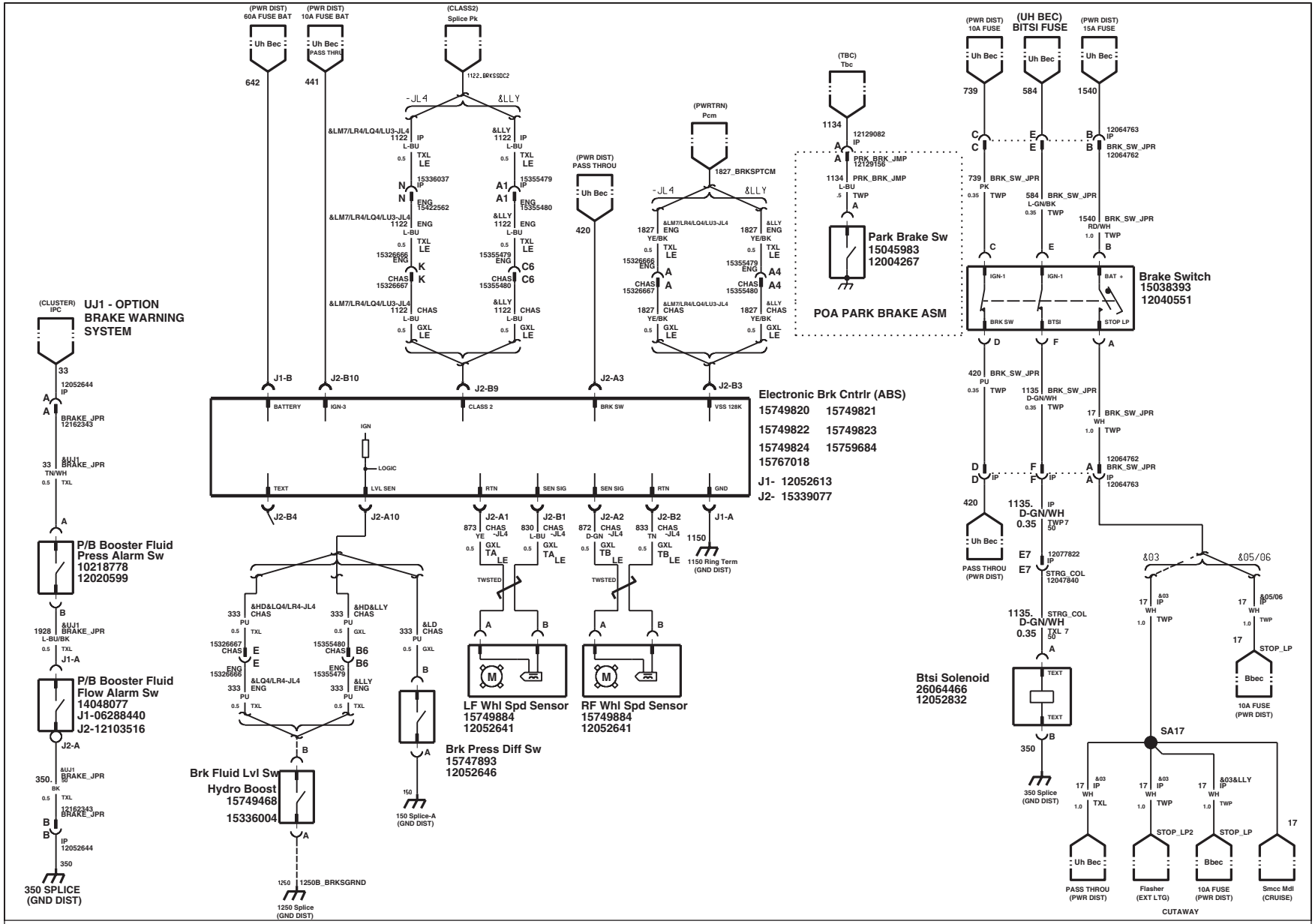
(PWR DIST) 60A FUSE BAT
(PWR DIST) 10A FUSE BAT
(CLASS2) Splice Pk
Uh Bec
642
441
1122_BRKSSDC2
-JL4
&LLY
&LM7/LR4/LQ4/LU3-JL4
(PWR DIST) PASS THROU
420
(PWRTRN) Pcm
1827_BRKSPTCM
(TBC) Tbc
1134
12129082
PRK_BRK_JMP
12129156
Park Brake Sw
15045983
12004267
POA PARK BRAKE ASM
(PWR DIST) 10A FUSE
(UH BEC) BITSI FUSE
(PWR DIST) 15A FUSE
739
584
1540
12064763
BRK_SW_JPR
12064762
Brake Switch
15038393
12040551
IGN-1
BAT +
BRK SW
BTSI
STOP LP
(CLUSTER) IPC
UJ1 - OPTION BRAKE WARNING SYSTEM
33
12052644
BRAKE_JPR
12162343
P/B Booster Fluid Press Alarm Sw
10218778
12020599
1928
P/B Booster Fluid Flow Alarm Sw
14048077
J1-06288440
J2-12103516
J2-A
350.
350 SPLICE (GND DIST)
J1-B
J2-B10
J2-B9
J2-A3
J2-B3
BATTERY
IGN-3
CLASS 2
BRK SW
VSS 128K
Electronic Brk Cntrlr (ABS)
15749820
15749821
15749822
15749823
15749824
15759684
15767018
J1- 12052613
J2- 15339077
IGN
LOGIC
TEXT
LVL SEN
RTN
SEN SIG
GND
J2-B4
J2-A10
J2-A1
J2-B1
J2-A2
J2-B2
J1-A
1150
1150 Ring Term (GND DIST)
TWSTED
LF Whl Spd Sensor
15749884
12052641
RF Whl Spd Sensor
15749884
12052641
Brk Press Diff Sw
15747893
12052646
Brk Fluid Lvl Sw
Hydro Boost
15749468
15336004
1250
1250B_BRKSGRND
1250 Splice (GND DIST)
150
150 Splice-A (GND DIST)
PASS THROU (PWR DIST)
12077822
STRG_COL
12047840
Btsi Solenoid
26064466
12052832
350
350 Splice (GND DIST)
&03
&05/06
10A FUSE (PWR DIST)
SA17
STOP_LP2
STOP_LP
Uh Bec
Bbec
Flasher (EXT LTG)
Smcc Mdl (CRUISE)
CUTAWAY
Brakes (ABS)
GMT610
06 G_Van
Panel Set: 1
schematic
sheet1
5
OBJECT ID
826044a
REVISION
003
STAGE
X
VERSION
LAST CHANGED BY
$IVEDWORK/826044a__003
Tuesday, August 3, 2004
1:56:05 pm
ORGANIZATION
GMT610
Panel Set: 1

Vses W/ ABS

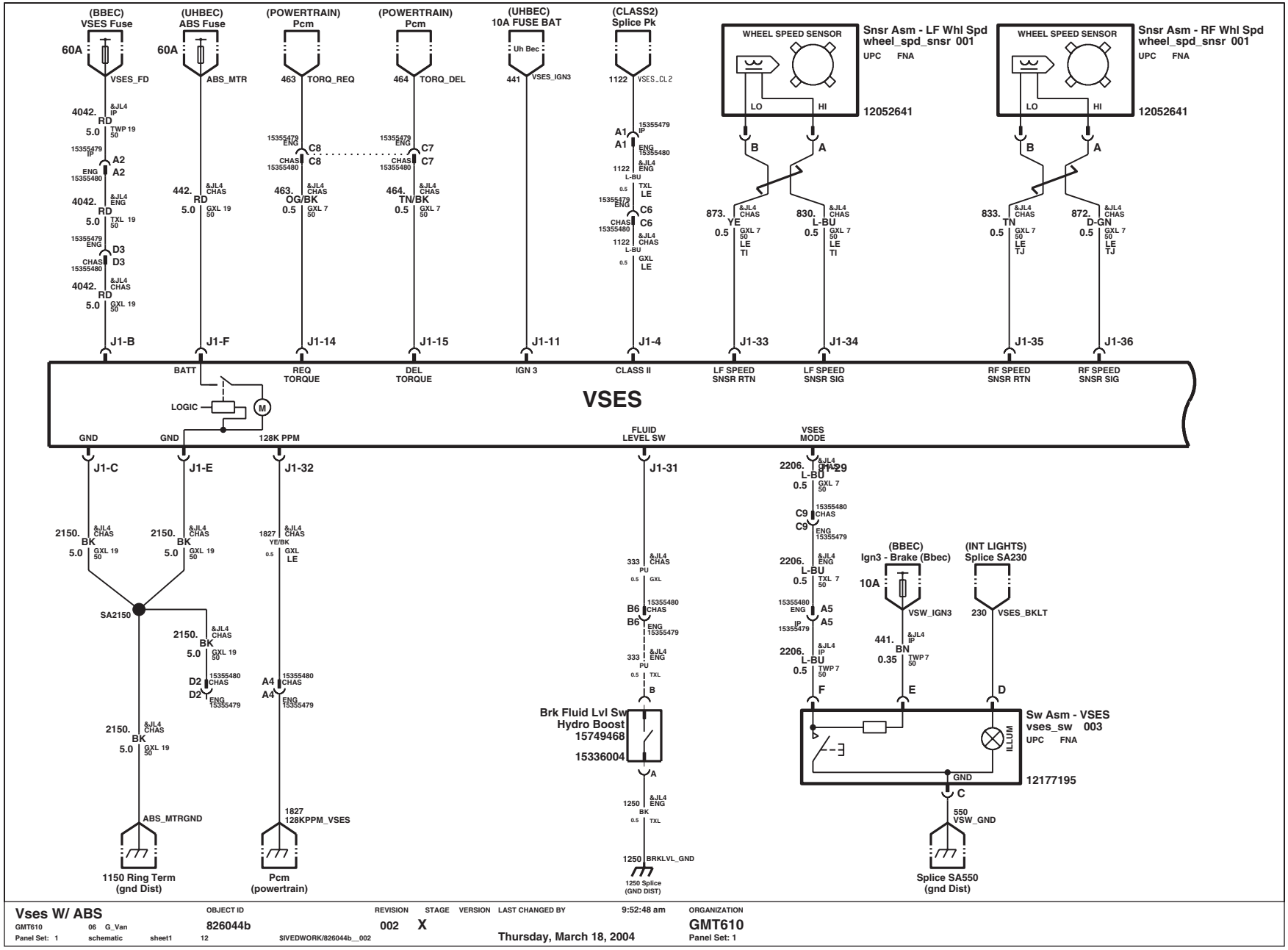

Vses W/ ABS	OBJECT ID	REVISION	STAGE	VERSION	LAST CHANGED BY	9:52:48 am	ORGANIZATION
GMT610 06 G_Van	826044b	002	X		Thursday, March 18, 2004		GMT610
Panel Set: 1 schematic sheet1 12	$IVEDWORK/826044b__002						Panel Set: 1

Vses W/ ABS

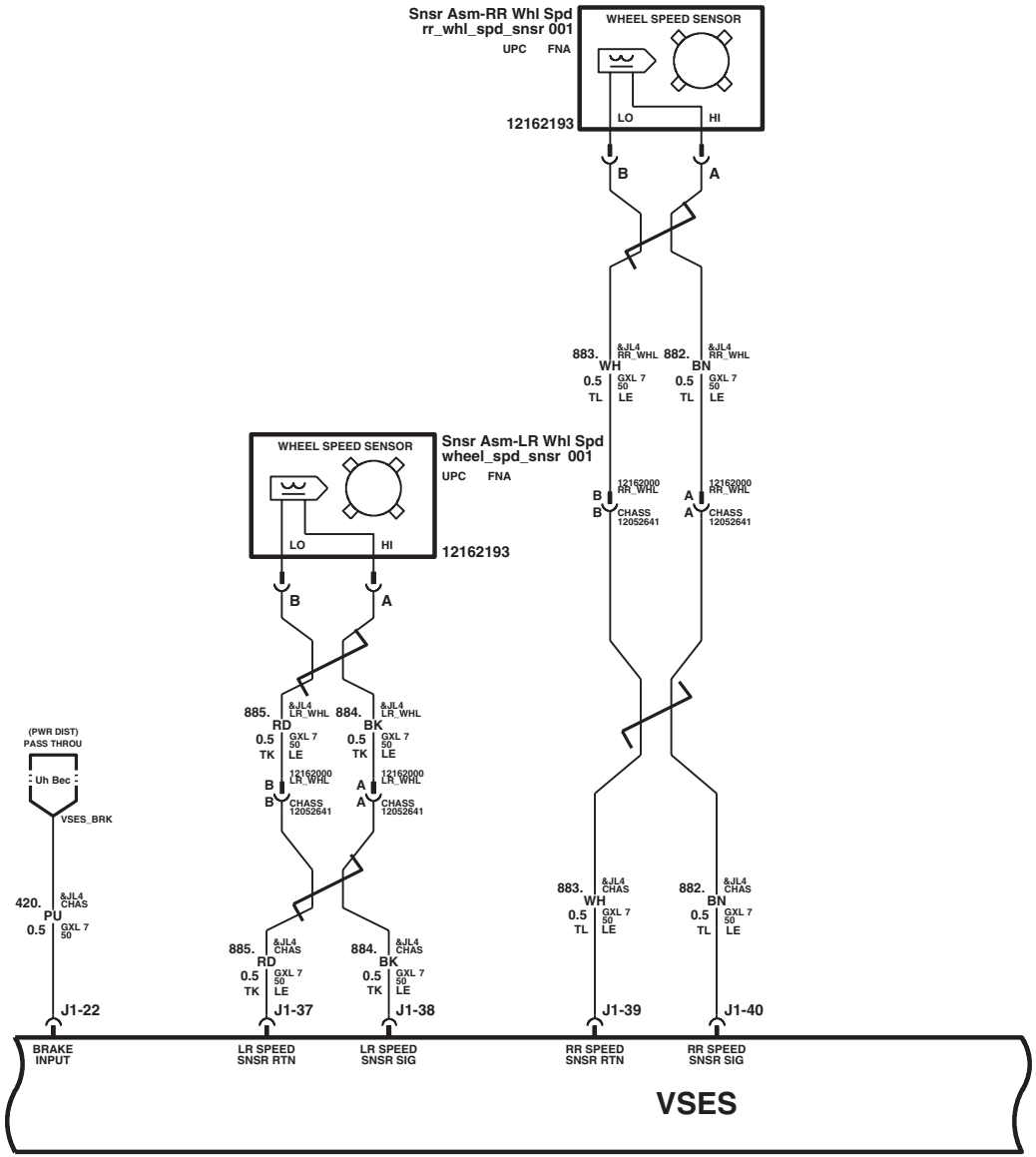

Vses W/ ABS	OBJECT ID	REVISION	STAGE	VERSION	LAST CHANGED BY	9:52:48 am	ORGANIZATION
GMT610 06 G_Van	826044b	002	X		Thursday, March 18, 2004		GMT610
Panel Set: 2 schematic sheet1 12	$IVEDWORK/826044b__002						Panel Set: 2

Vses W/ ABS

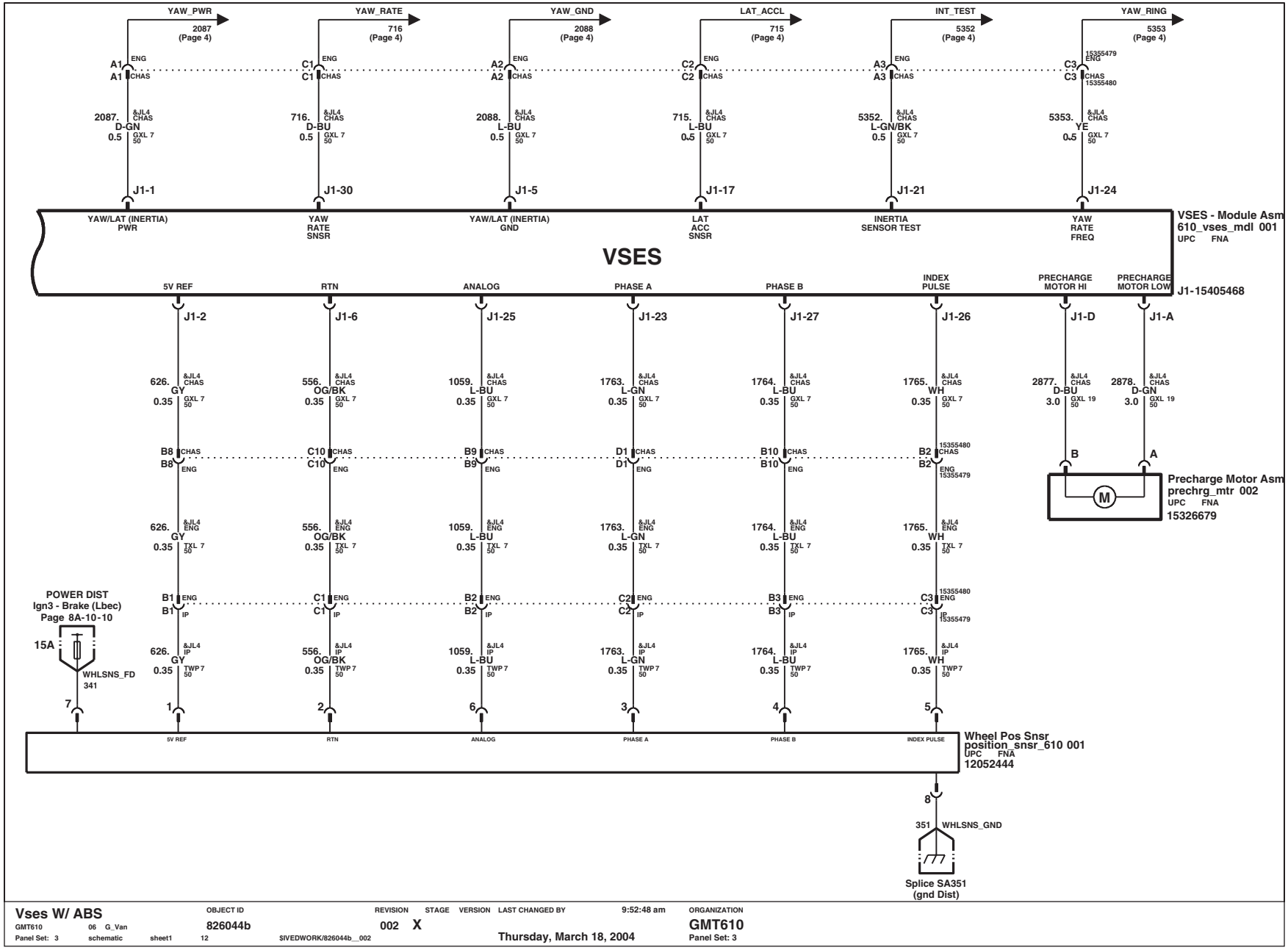
YAW_PWR
2087 (Page 4)
YAW_RATE
716 (Page 4)
YAW_GND
2088 (Page 4)
LAT_ACCL
715 (Page 4)
INT_TEST
5352 (Page 4)
YAW_RING
5353 (Page 4)
A1 ENG
A1 CHAS
2087. &JL4 CHAS D-GN 0.5 GXL 7 50
C1 ENG
C1 CHAS
716. &JL4 CHAS D-BU 0.5 GXL 7 50
A2 ENG
A2 CHAS
2088. &JL4 CHAS L-BU 0.5 GXL 7 50
C2 ENG
C2 CHAS
715. &JL4 CHAS L-BU 0.5 GXL 7 50
A3 ENG
A3 CHAS
5352. &JL4 CHAS L-GN/BK 0.5 GXL 7 50
C3 15355479 ENG
C3 CHAS 15355480
5353. &JL4 CHAS YE 0.5 GXL 7 50
J1-1
J1-30
J1-5
J1-17
J1-21
J1-24
YAW/LAT (INERTIA) PWR
YAW RATE SNSR
YAW/LAT (INERTIA) GND
LAT ACC SNSR
INERTIA SENSOR TEST
YAW RATE FREQ
VSES - Module Asm
610_vses_mdl 001
UPC FNA
VSES
5V REF
RTN
ANALOG
PHASE A
PHASE B
INDEX PULSE
PRECHARGE MOTOR HI
PRECHARGE MOTOR LOW
J1-15405468
J1-2
J1-6
J1-25
J1-23
J1-27
J1-26
J1-D
J1-A
626. &JL4 CHAS GY 0.35 GXL 7 50
556. &JL4 CHAS OG/BK 0.35 GXL 7 50
1059. &JL4 CHAS L-BU 0.35 GXL 7 50
1763. &JL4 CHAS L-GN 0.35 GXL 7 50
1764. &JL4 CHAS L-BU 0.35 GXL 7 50
1765. &JL4 CHAS WH 0.35 GXL 7 50
2877. &JL4 CHAS D-BU 3.0 GXL 19 50
2878. &JL4 CHAS D-GN 3.0 GXL 19 50
B8 CHAS
B8 ENG
C10 CHAS
C10 ENG
B9 CHAS
B9 ENG
D1 CHAS
D1 ENG
B10 CHAS
B10 ENG
B2 15355480 CHAS
B2 ENG 15355479
B
A
M
Precharge Motor Asm
prechrg_mtr 002
UPC FNA
15326679
626. &JL4 ENG GY 0.35 TXL 7 50
556. &JL4 ENG OG/BK 0.35 TXL 7 50
1059. &JL4 ENG L-BU 0.35 TXL 7 50
1763. &JL4 ENG L-GN 0.35 TXL 7 50
1764. &JL4 ENG L-BU 0.35 TXL 7 50
1765. &JL4 ENG WH 0.35 TXL 7 50
POWER DIST
Ign3 - Brake (Lbec)
Page 8A-10-10
15A
WHLSNS_FD
341
B1 ENG
B1 IP
C1 ENG
C1 IP
B2 ENG
B2 IP
C2 ENG
C2 IP
B3 ENG
B3 IP
C3 15355480 ENG
C3 IP 15355479
626. &JL4 IP GY 0.35 TWP 7 50
556. &JL4 IP OG/BK 0.35 TWP 7 50
1059. &JL4 IP L-BU 0.35 TWP 7 50
1763. &JL4 IP L-GN 0.35 TWP 7 50
1764. &JL4 IP L-BU 0.35 TWP 7 50
1765. &JL4 IP WH 0.35 TWP 7 50
7
1
2
6
3
4
5
5V REF
RTN
ANALOG
PHASE A
PHASE B
INDEX PULSE
Wheel Pos Snsr
position_snsr_610 001
UPC FNA
12052444
8
351 WHLSNS_GND
Splice SA351
(gnd Dist)
Vses W/ ABS
GMT610 06 G_Van
Panel Set: 3 schematic sheet1 12
OBJECT ID 826044b
$IVEDWORK/826044b__002
REVISION 002 STAGE X VERSION
LAST CHANGED BY
9:52:48 am
Thursday, March 18, 2004
ORGANIZATION GMT610
Panel Set: 3

Vses W/ ABS

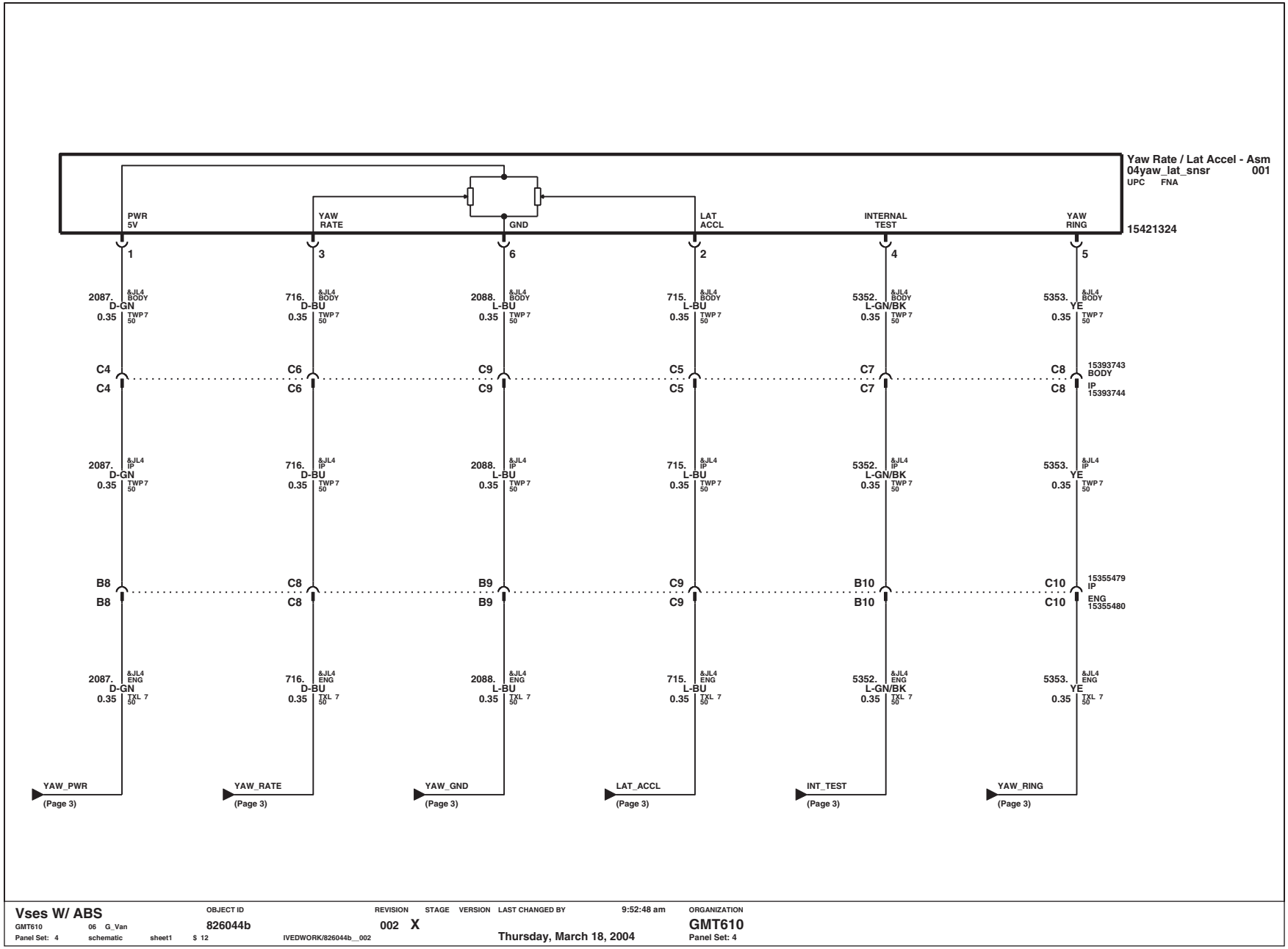
Yaw Rate / Lat Accel - Asm
04yaw_lat_snsr 001
UPC FNA
15421324
PWR 5V
YAW RATE
GND
LAT ACCL
INTERNAL TEST
YAW RING
1
3
6
2
4
5
2087. D-GN 0.35 &JL4 BODY TWP 7 50
716. D-BU 0.35 &JL4 BODY TWP 7 50
2088. L-BU 0.35 &JL4 BODY TWP 7 50
715. L-BU 0.35 &JL4 BODY TWP 7 50
5352. L-GN/BK 0.35 &JL4 BODY TWP 7 50
5353. YE 0.35 &JL4 BODY TWP 7 50
C4 C4
C6 C6
C9 C9
C5 C5
C7 C7
C8 C8
15393743 BODY
IP 15393744
2087. D-GN 0.35 &JL4 IP TWP 7 50
716. D-BU 0.35 &JL4 IP TWP 7 50
2088. L-BU 0.35 &JL4 IP TWP 7 50
715. L-BU 0.35 &JL4 IP TWP 7 50
5352. L-GN/BK 0.35 &JL4 IP TWP 7 50
5353. YE 0.35 &JL4 IP TWP 7 50
B8 B8
C8 C8
B9 B9
C9 C9
B10 B10
C10 C10
15355479 IP
ENG 15355480
2087. D-GN 0.35 &JL4 ENG TXL 7 50
716. D-BU 0.35 &JL4 ENG TXL 7 50
2088. L-BU 0.35 &JL4 ENG TXL 7 50
715. L-BU 0.35 &JL4 ENG TXL 7 50
5352. L-GN/BK 0.35 &JL4 ENG TXL 7 50
5353. YE 0.35 &JL4 ENG TXL 7 50
YAW_PWR (Page 3)
YAW_RATE (Page 3)
YAW_GND (Page 3)
LAT_ACCL (Page 3)
INT_TEST (Page 3)
YAW_RING (Page 3)
Vses W/ ABS
GMT610 06 G_Van
Panel Set: 4 schematic sheet1 $ 12
OBJECT ID 826044b
IVEDWORK/826044b__002
REVISION 002 STAGE X VERSION
LAST CHANGED BY
9:52:48 am
Thursday, March 18, 2004
ORGANIZATION GMT610
Panel Set: 4

Occupant Protection

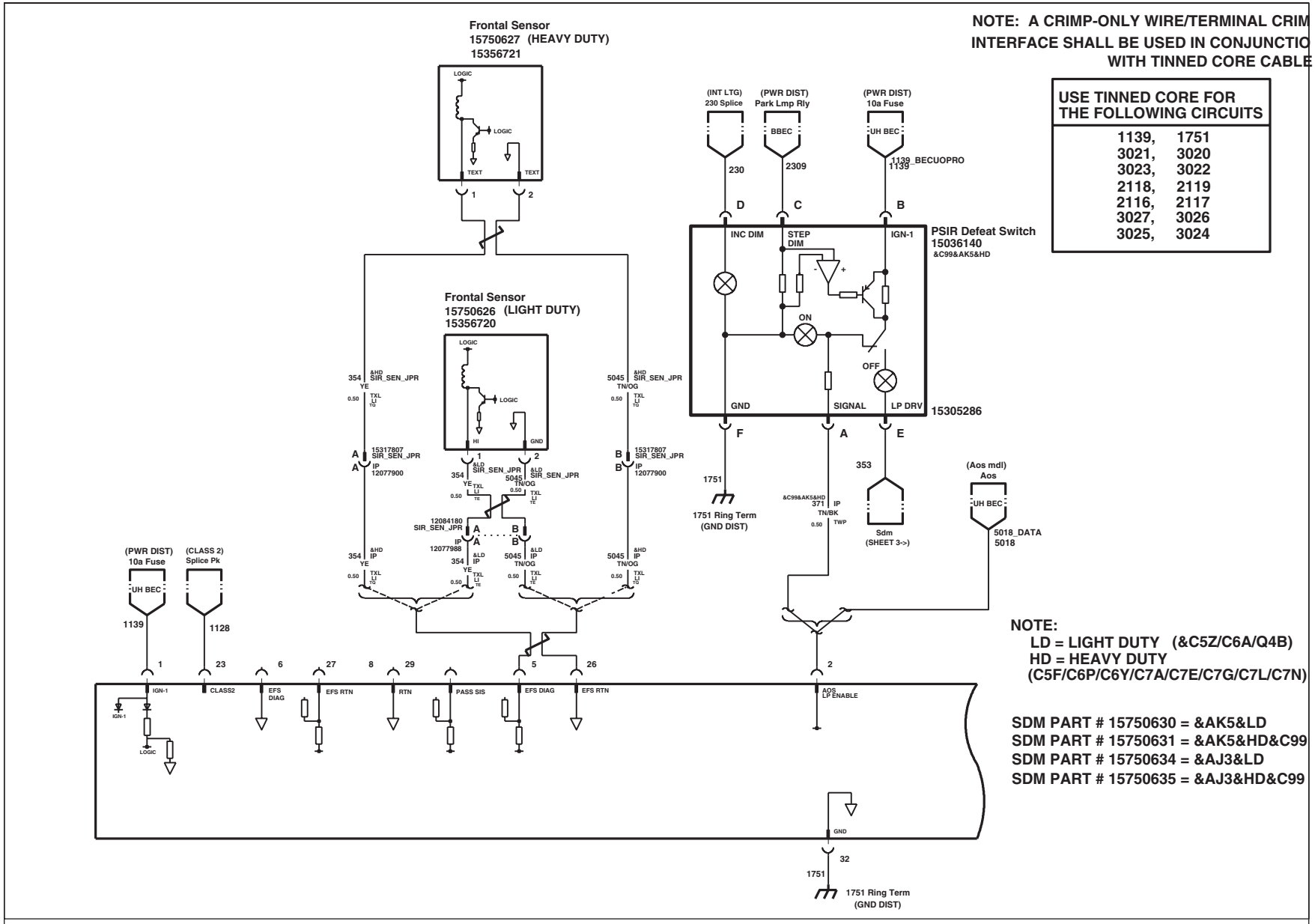

Occupant Protection

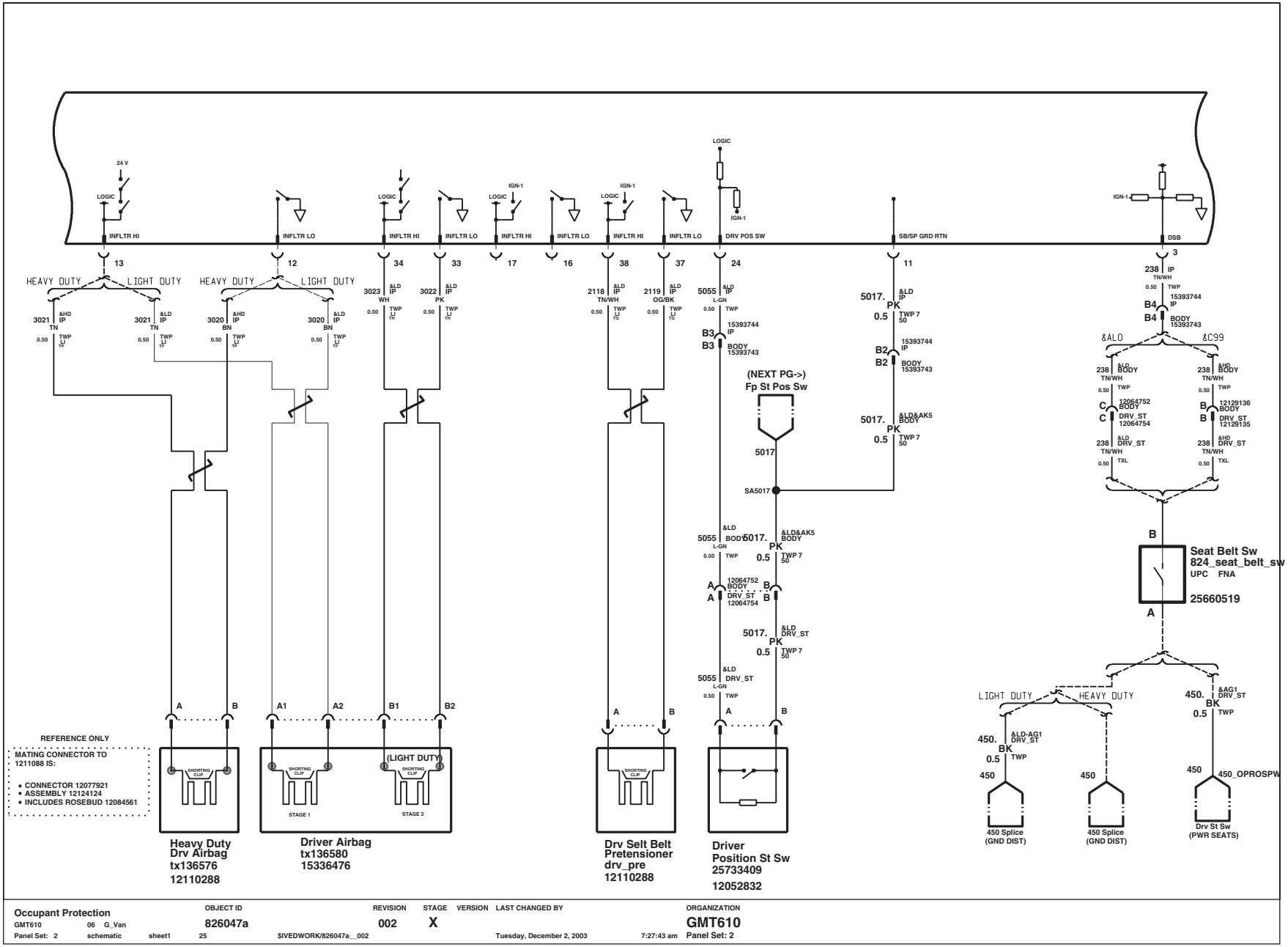

Occupant Protection	OBJECT ID	REVISION	STAGE	VERSION	LAST CHANGED BY	ORGANIZATION
GMT610 06 G_Van	826047a	002	X			GMT610
Panel Set: 2 schematic sheet1 25	$IVEDWORK/826047a__002				Tuesday, December 2, 2003 7:27:43 am	Panel Set: 2

Occupant Protection

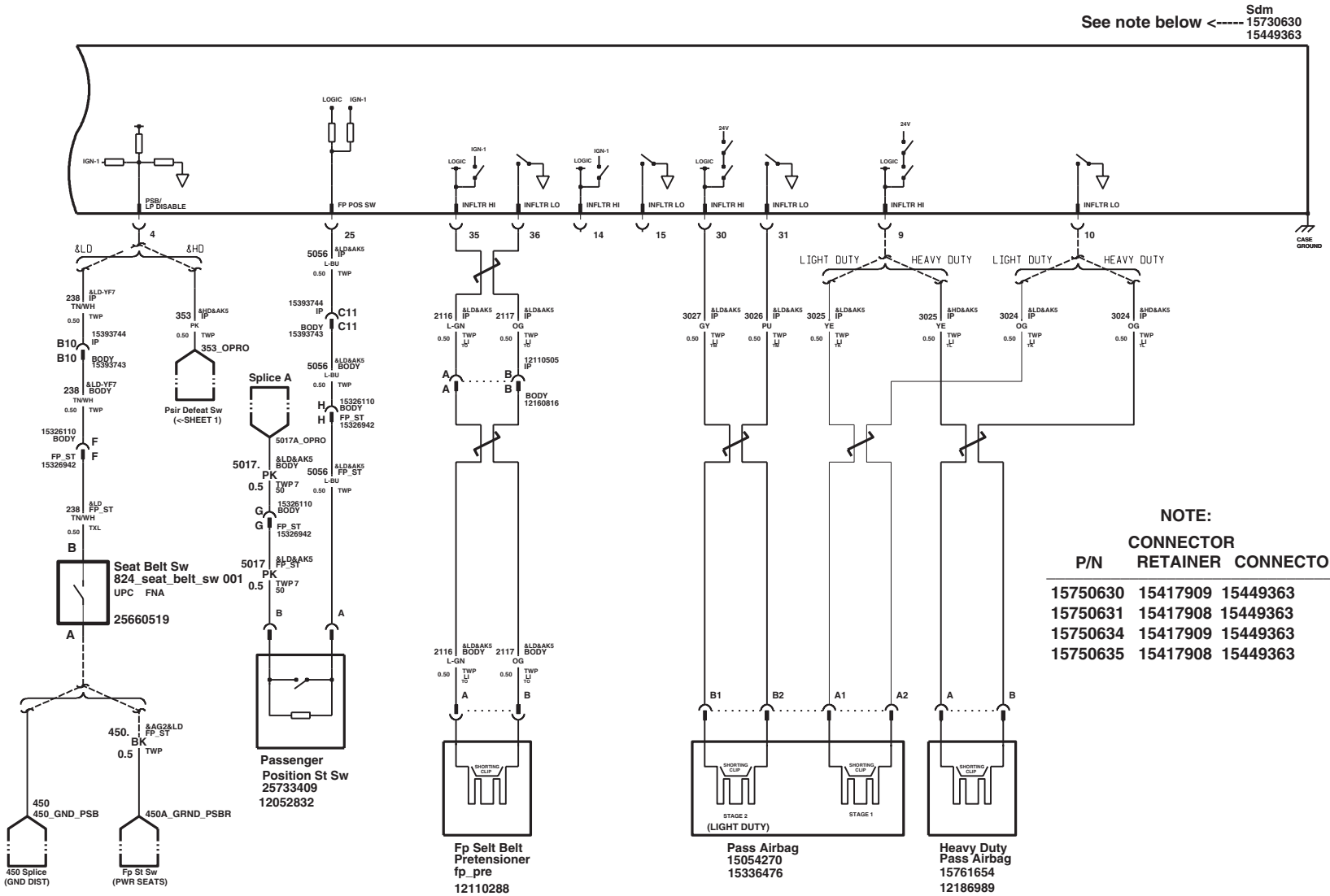

NOTE:

P/N	CONNECTOR RETAINER	CONNECTOR
15750630	15417909	15449363
15750631	15417908	15449363
15750634	15417909	15449363
15750635	15417908	15449363

Occupant Protection	OBJECT ID	REVISION	STAGE	VERSION	LAST CHANGED BY	ORGANIZATION
GMT610 06 G_Van	826047a	002	X			GMT610
Panel Set: 3 schematic sheet1 $ 25	IVEDWORK/826047a__002				Tuesday, December 2, 2003 7:27:43 am	Panel Set: 3

Automatic Occupant Suppression

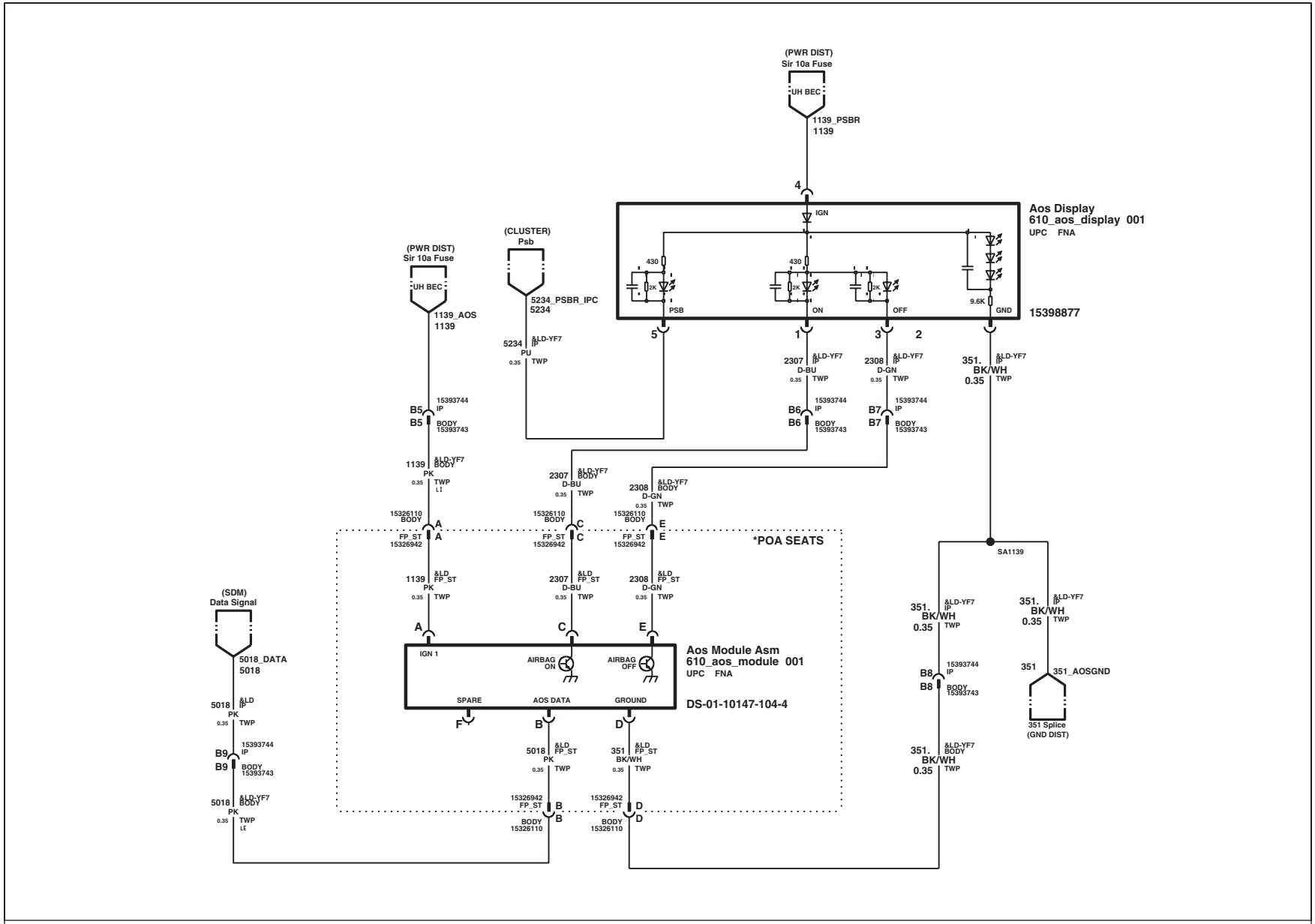

Automatic Occupant Supression	OBJECT ID	REVISION	STAGE	VERSION	LAST CHANGED BY	ORGANIZATION
GMT610 06 G_Van	826048a	002	X			GMT610
Panel Set: 1 schematic sheet1 27	$IVEDWORK/826048a__002				Sunday, February 1, 2004 10:19:06 pm	Panel Set: 1

Serial Data (Class 2)

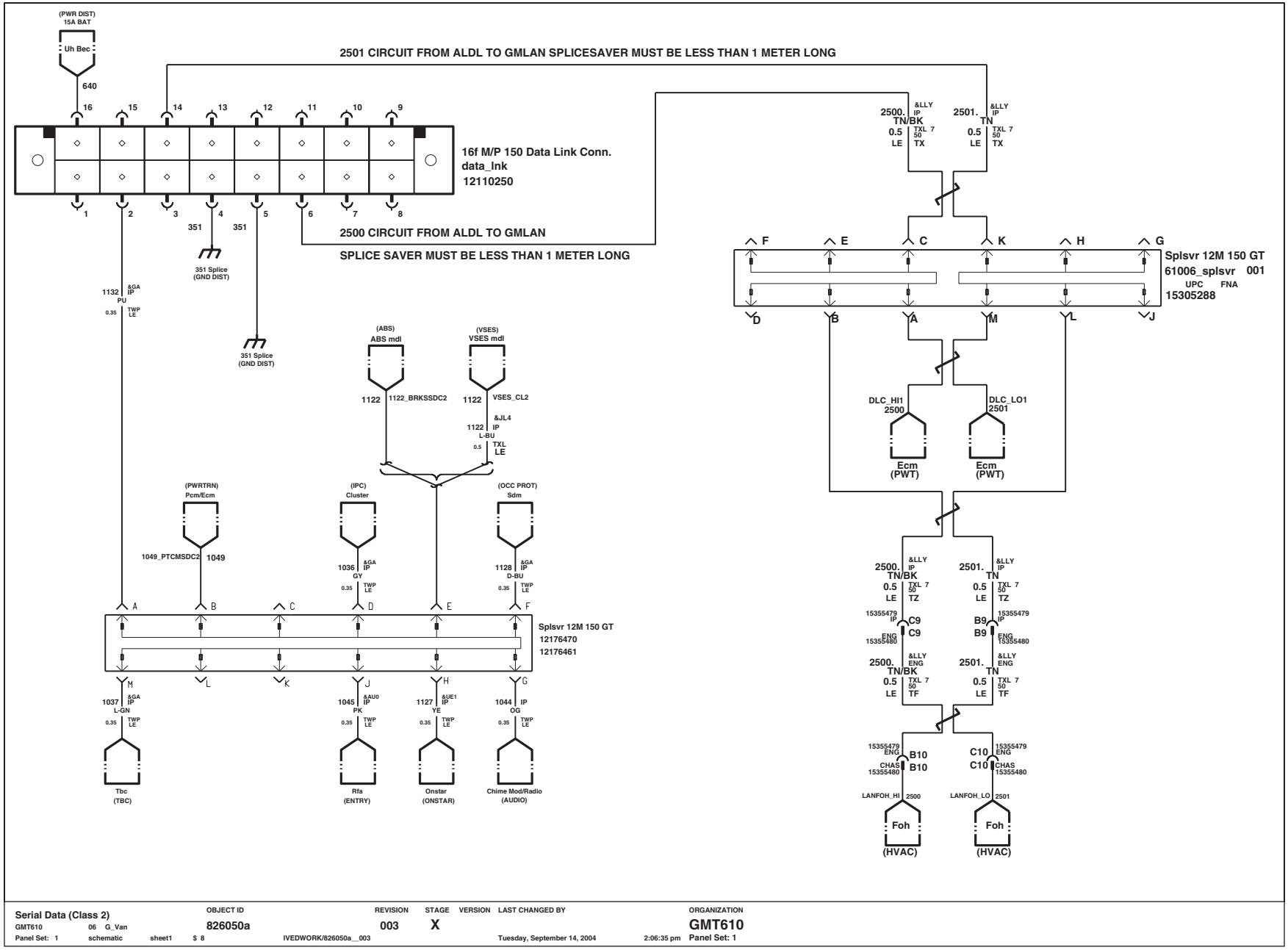

Serial Data (Class 2)

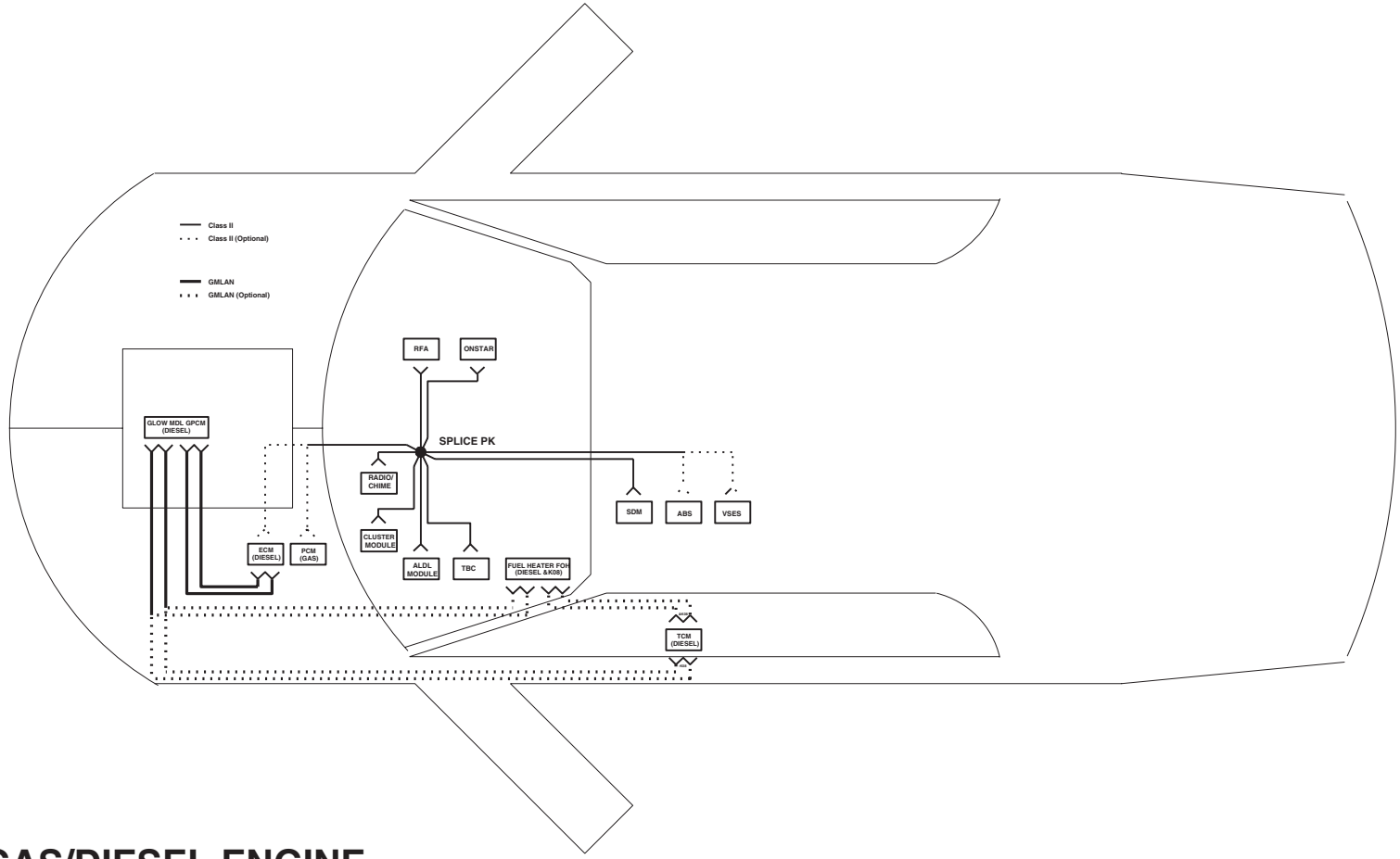

GAS/DIESEL ENGINE

Serial Data (Class 2)	OBJECT ID	REVISION	STAGE	VERSION	LAST CHANGED BY	ORGANIZATION
GMT610 06 G_Van	826050a	003	X			GMT610
Panel Set: 2 schematic sheet1 $ 8	IVEDWORK/826050a__003				Tuesday, September 14, 2004 2:06:35 pm	Panel Set: 2

Truck Body Controller

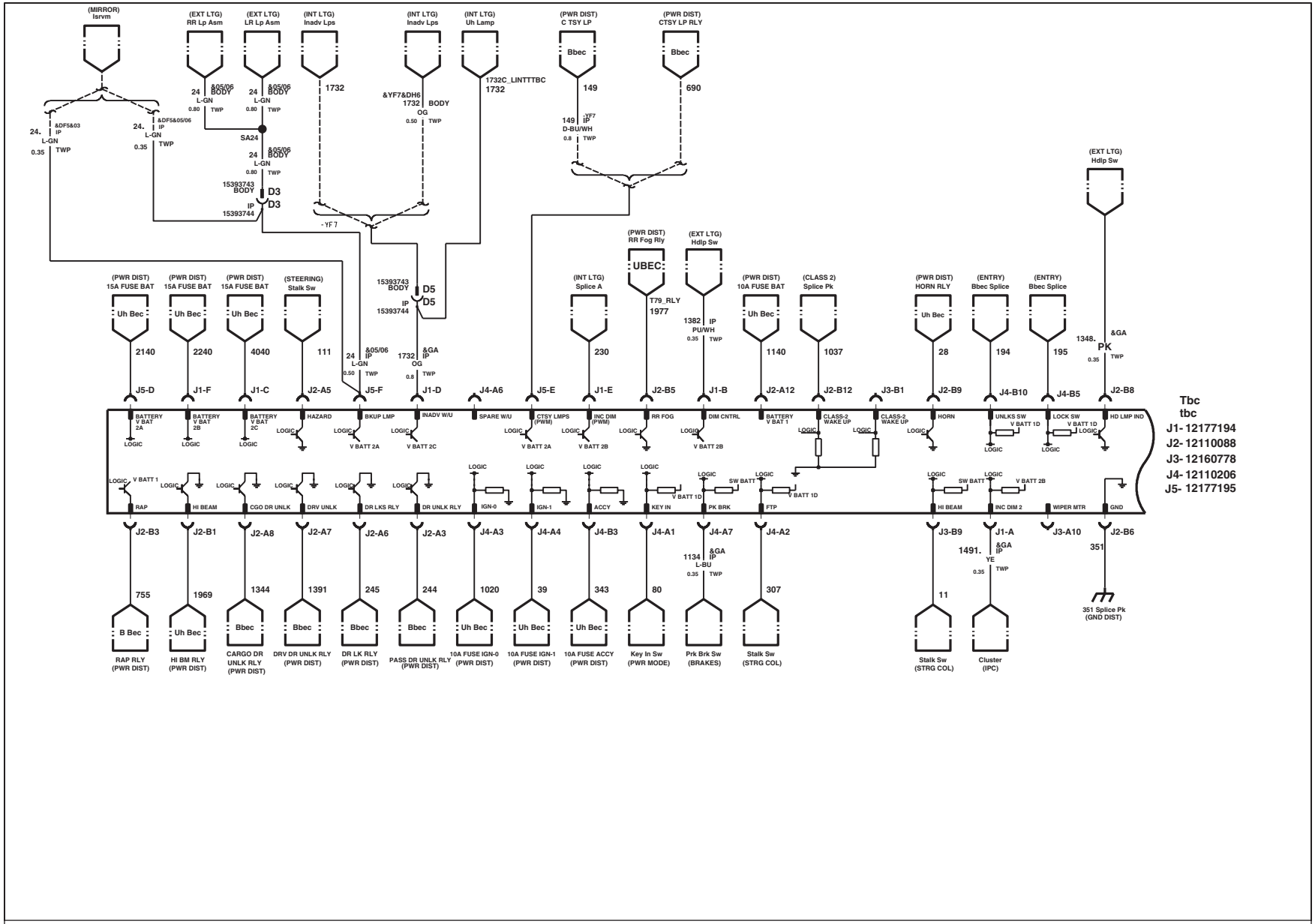

Truck Body Controller	OBJECT ID	REVISION	STAGE	VERSION	LAST CHANGED BY	ORGANIZATION
GMT610 06 G_Van	826051a	002	X			GMT610
Panel Set: 1 schematic sheet1 13	$IVEDWORK/826051a__002				Wednesday, February 25, 2004 2:50:25 pm	Panel Set: 1

Truck Body Controller

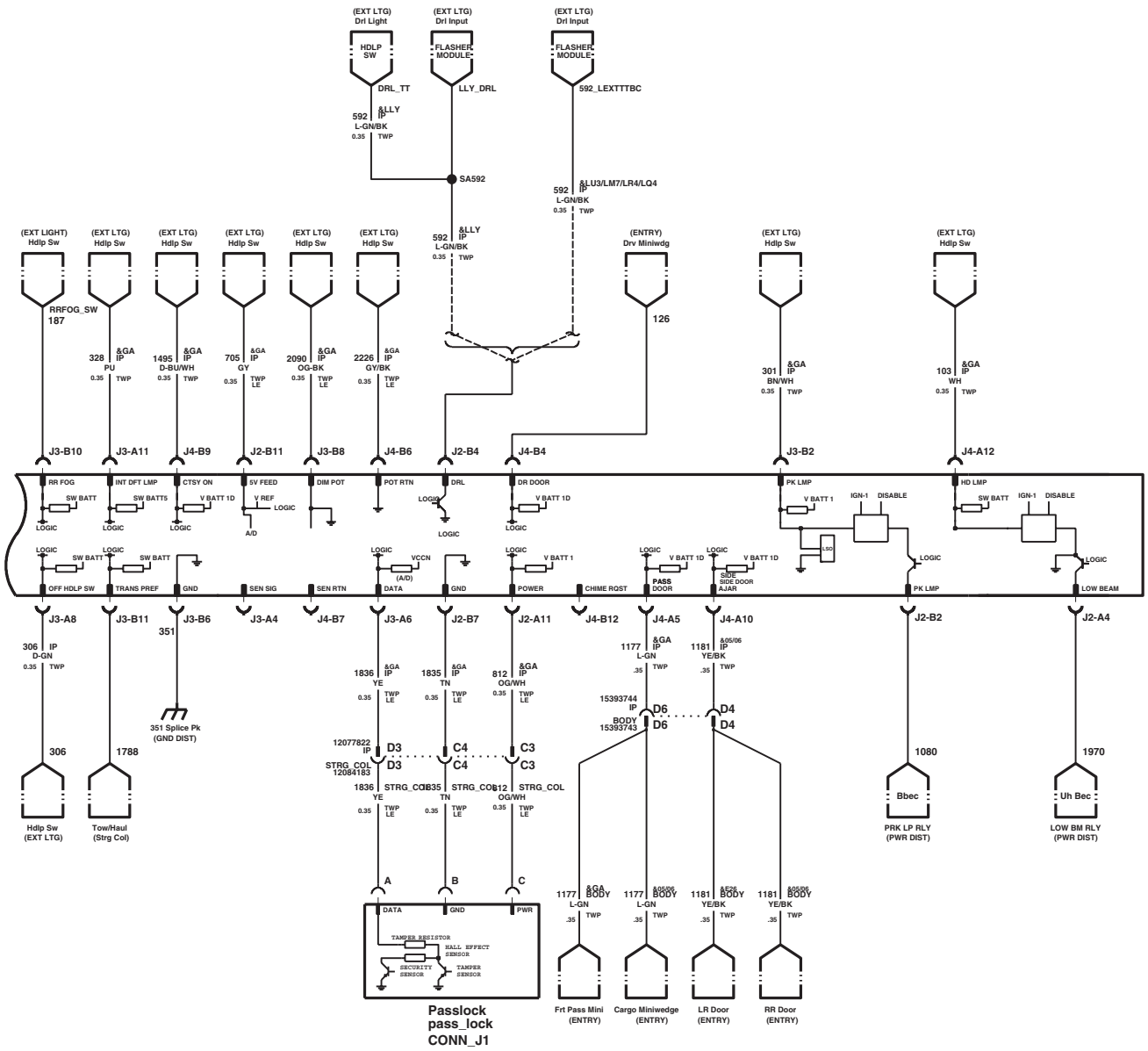

Truck Body Controller	OBJECT ID	REVISION	STAGE	VERSION	LAST CHANGED BY	ORGANIZATION
GMT610 06 G_Van	826051a	002	X			GMT610
Panel Set: 2 schematic sheet1 13	$IVEDWORK/826051a__002				Wednesday, February 25, 2004 2:50:25 pm	Panel Set: 2

Heating & Cooling (HVAC)

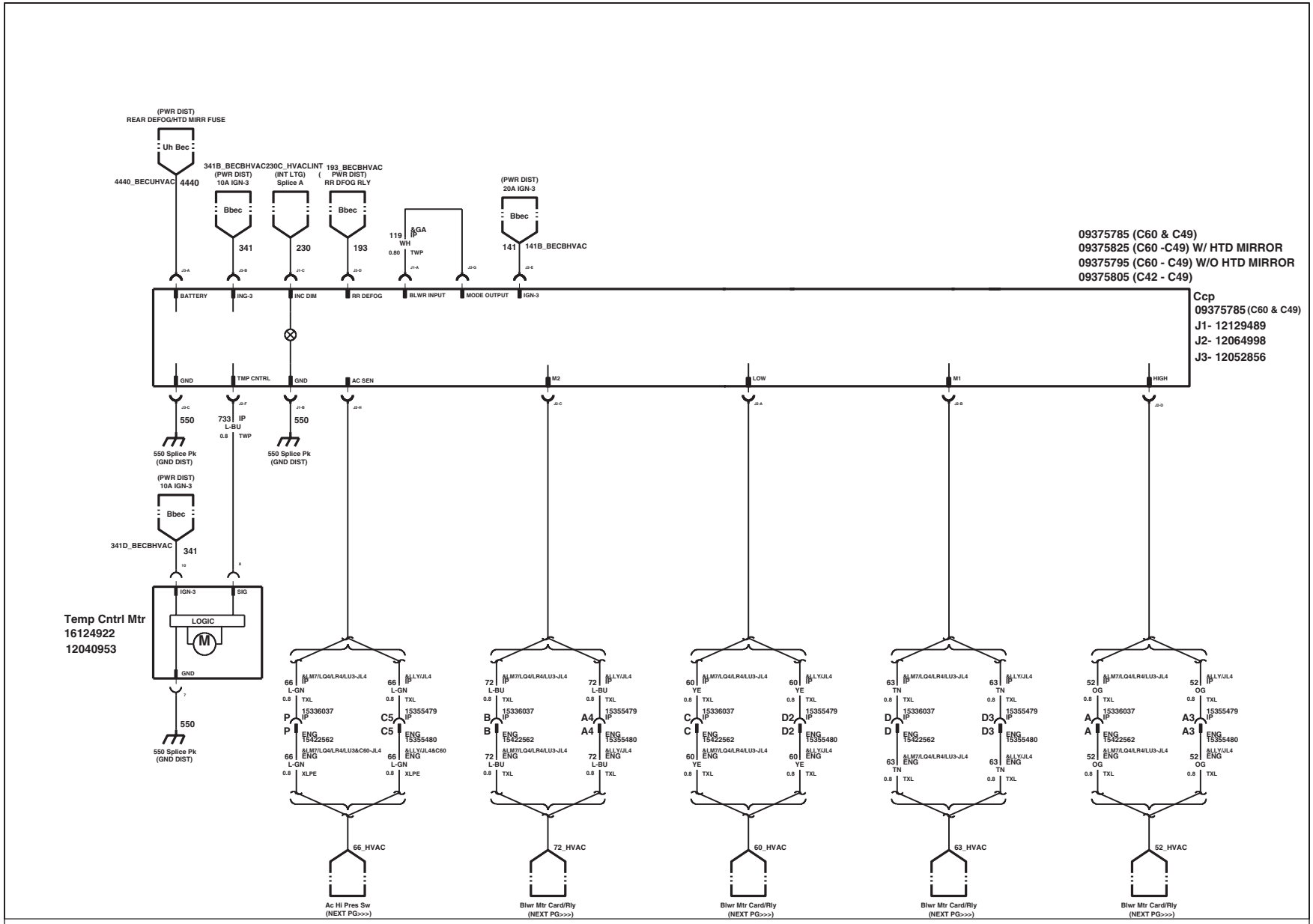

Heating & Cooling (HVAC)

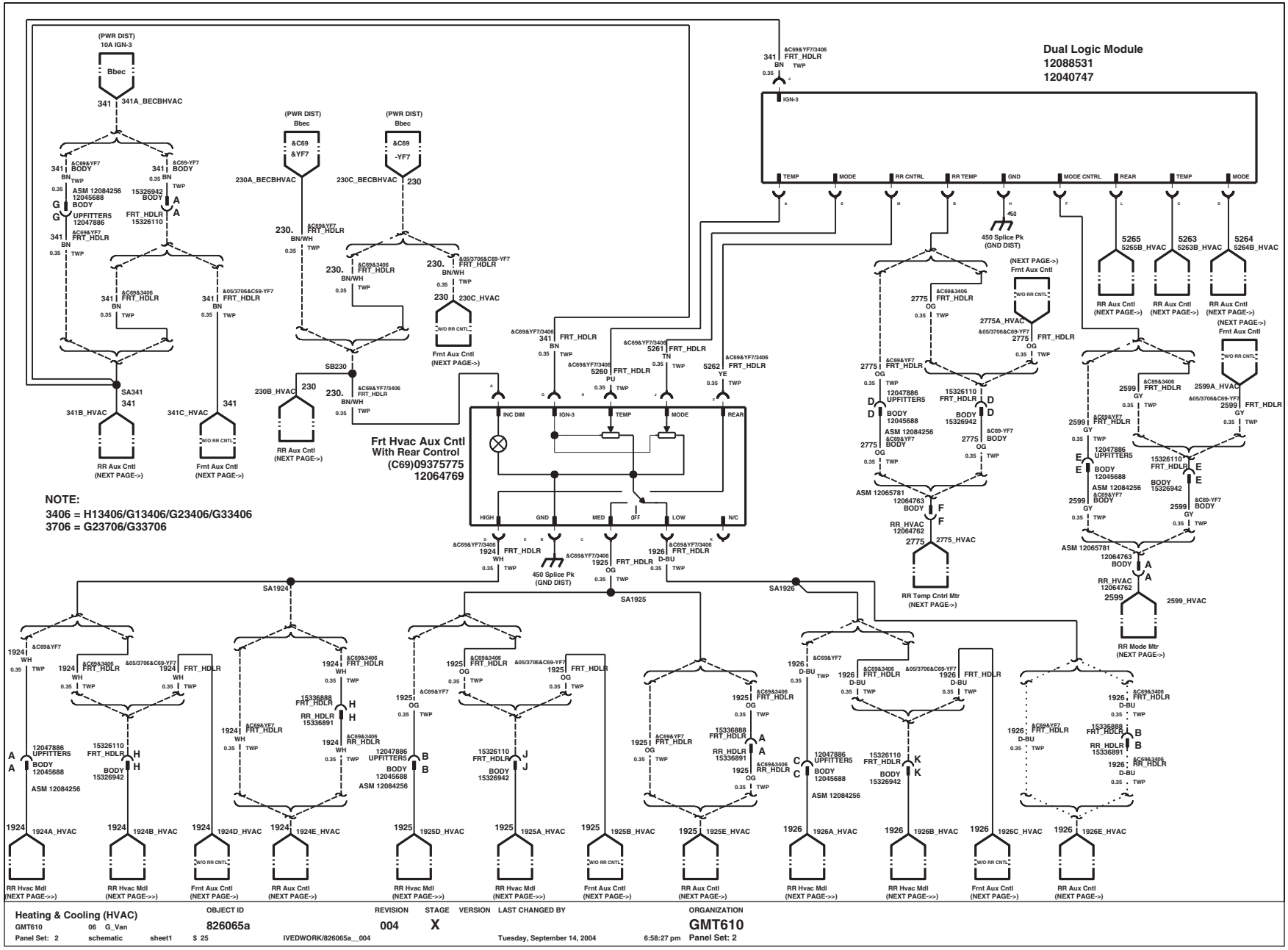

Heating & Cooling (HVAC)

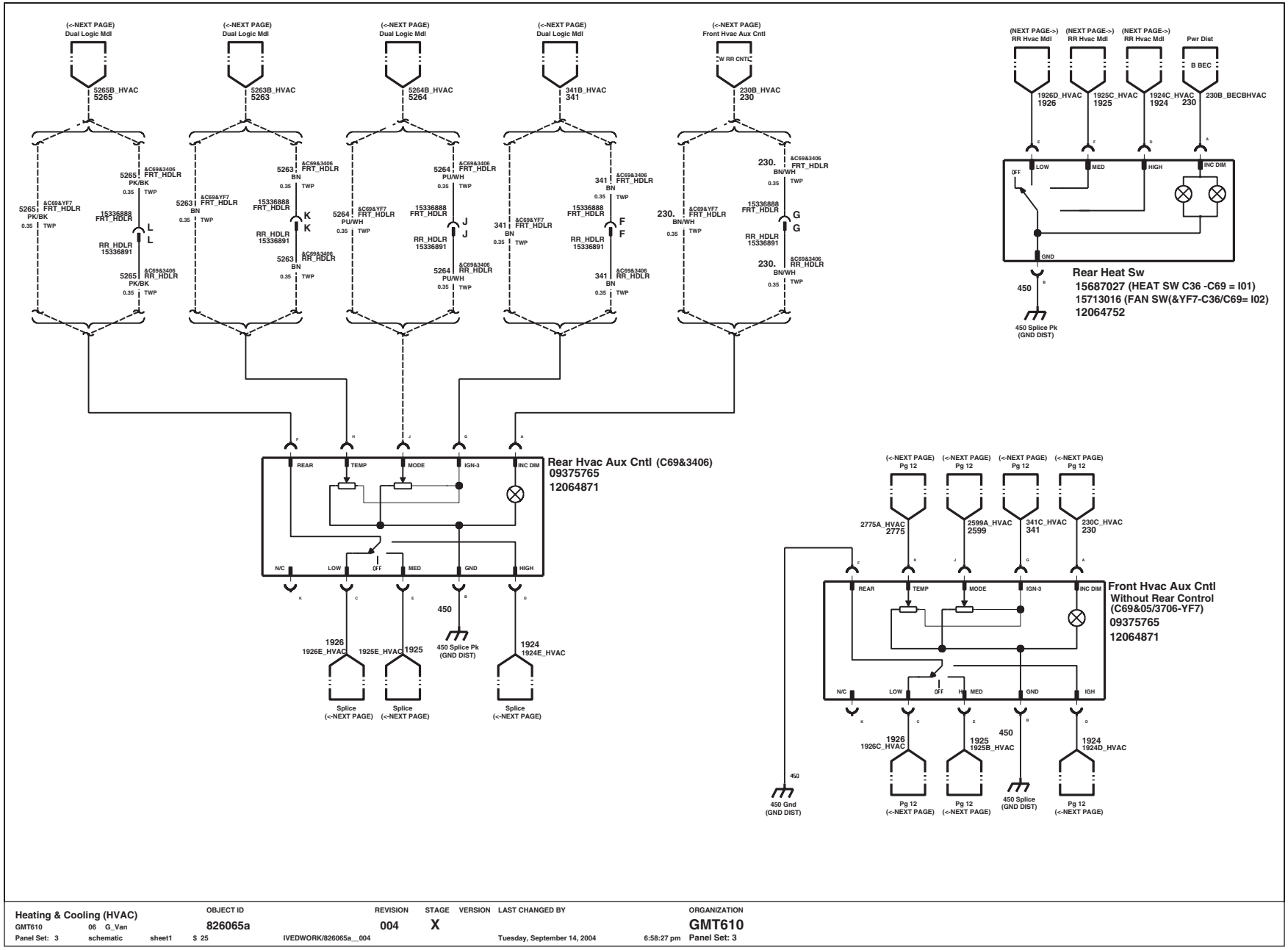

Heating & Cooling (HVAC)	OBJECT ID	REVISION	STAGE	VERSION	LAST CHANGED BY	ORGANIZATION
GMT610 06 G_Van	826065a	004	X			GMT610
Panel Set: 3 schematic sheet1 $ 25	IVEDWORK/826065a__004				Tuesday, September 14, 2004 6:58:27 pm	Panel Set: 3

2006 & 2007 G/H Full-Size Van Electrical

Heating & Cooling (HVAC)

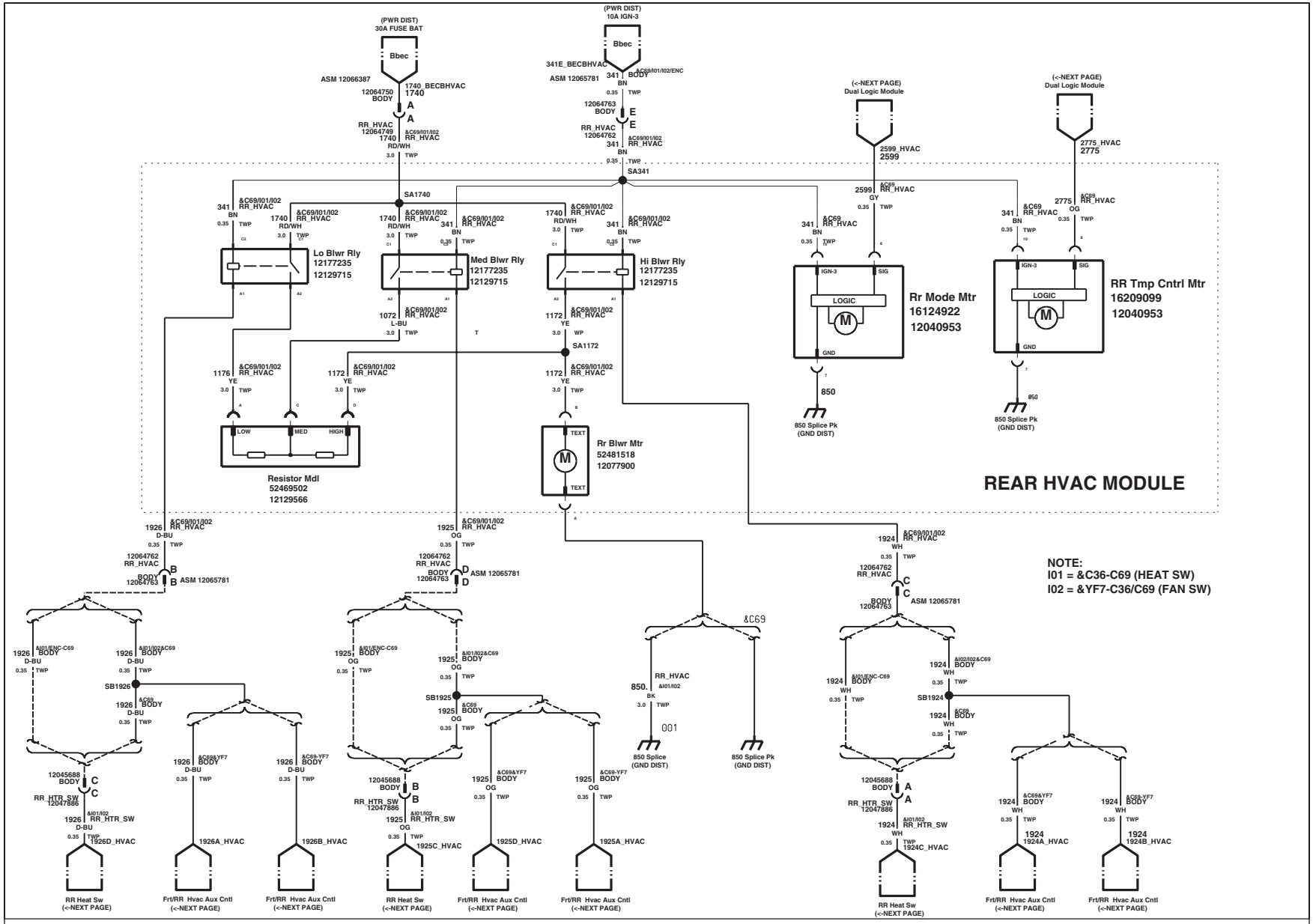

Heating & Cooling (HVAC)	OBJECT ID	REVISION	STAGE	VERSION	LAST CHANGED BY	ORGANIZATION
GMT610 06 G_Van	826065a	004	X			GMT610
Panel Set: 4 schematic sheet1 25	$IVEDWORK/826065a__004				Tuesday, September 14, 2004 6:58:27 pm	Panel Set: 4

Heating & Cooling (HVAC)

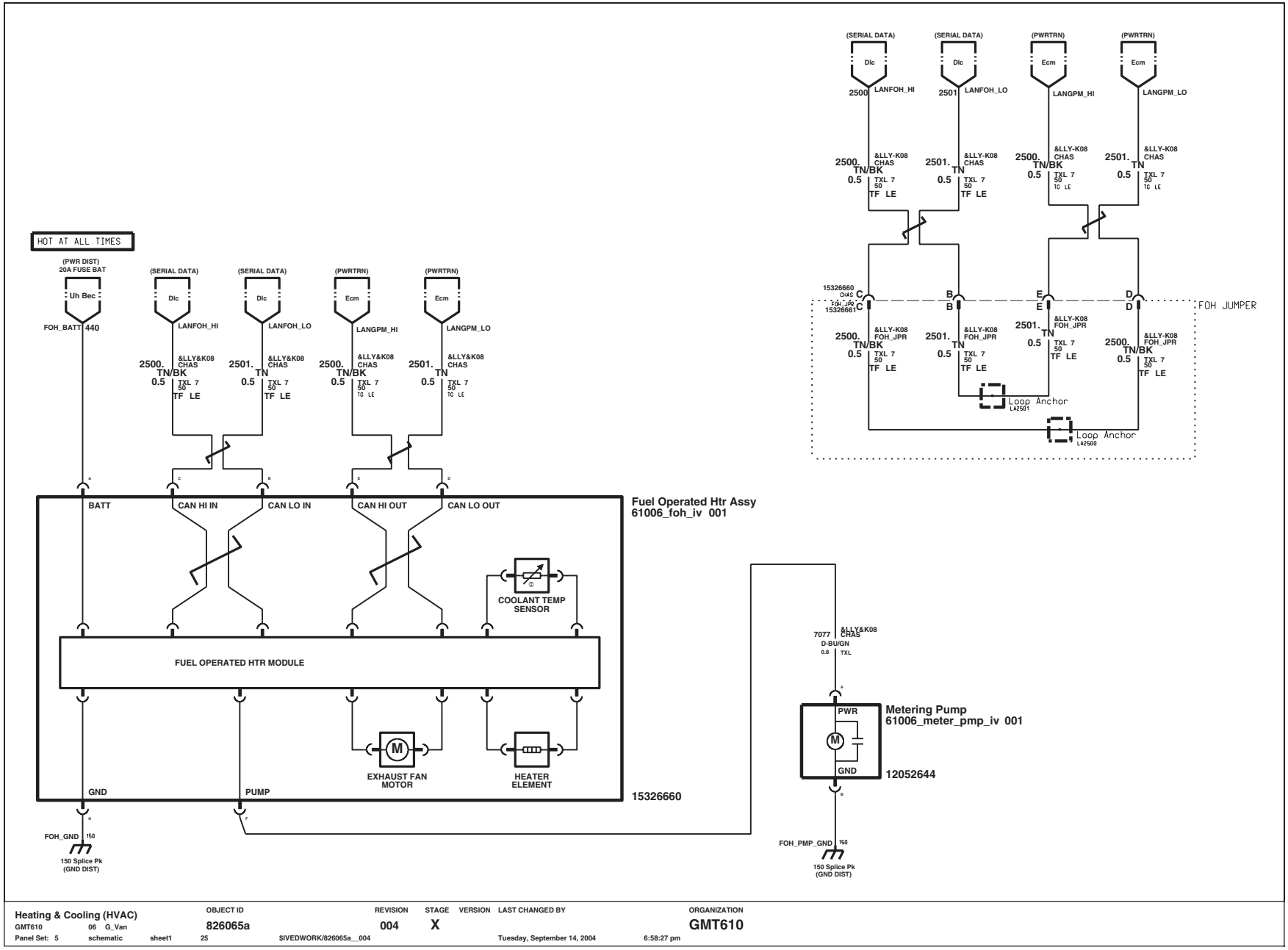

Heating & Cooling (HVAC)

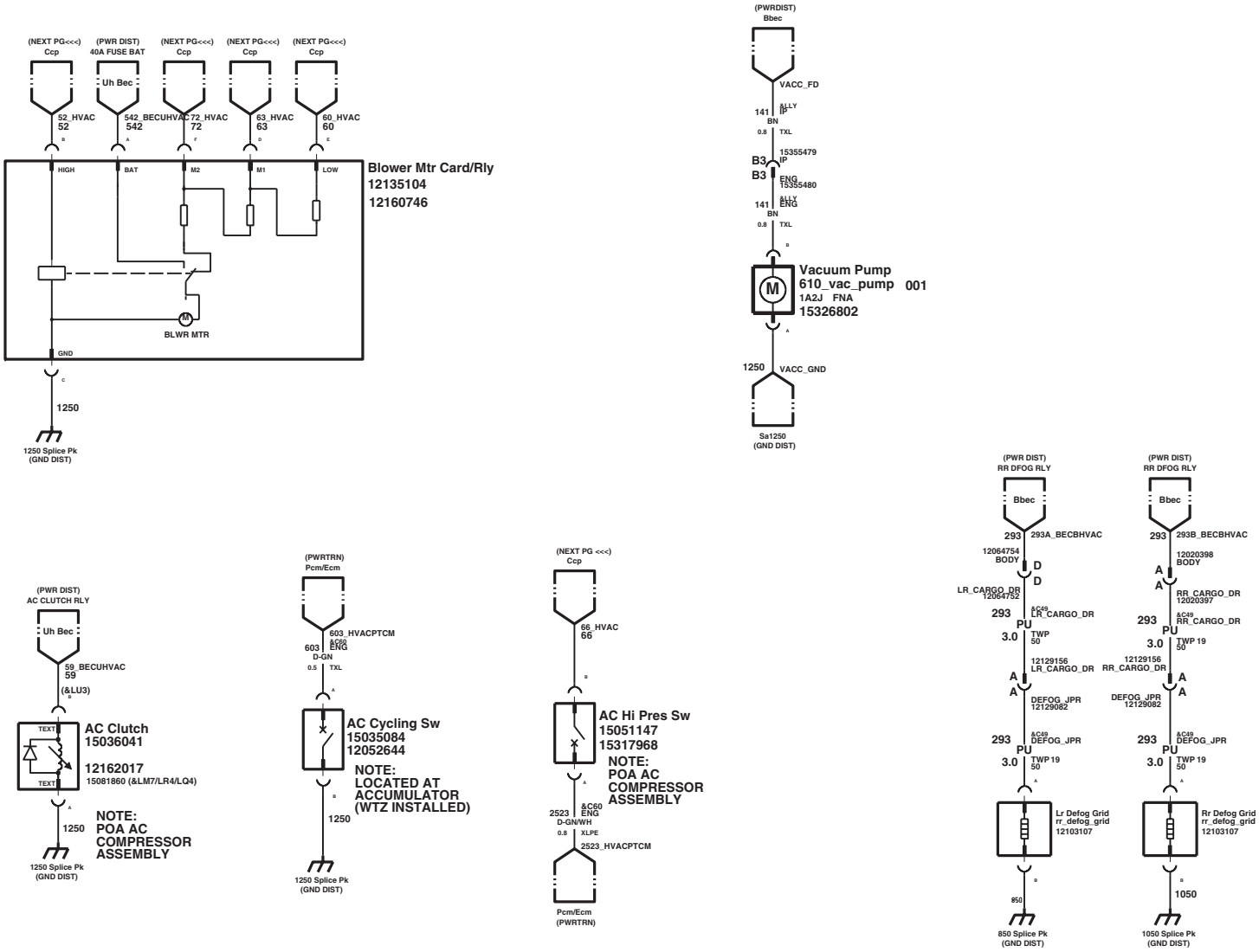

Heating & Cooling (HVAC)	OBJECT ID	REVISION	STAGE	VERSION	LAST CHANGED BY	ORGANIZATION
GMT610 06 G_Van	826065a	004	X	0		GMT610
Panel Set: 6 schematic sheet1 25	$IVEDWORK/826065a__004				Tuesday, September 14, 2004 6:58:27 pm	Panel Set: 6

Instrument Panel Cluster (Displays)

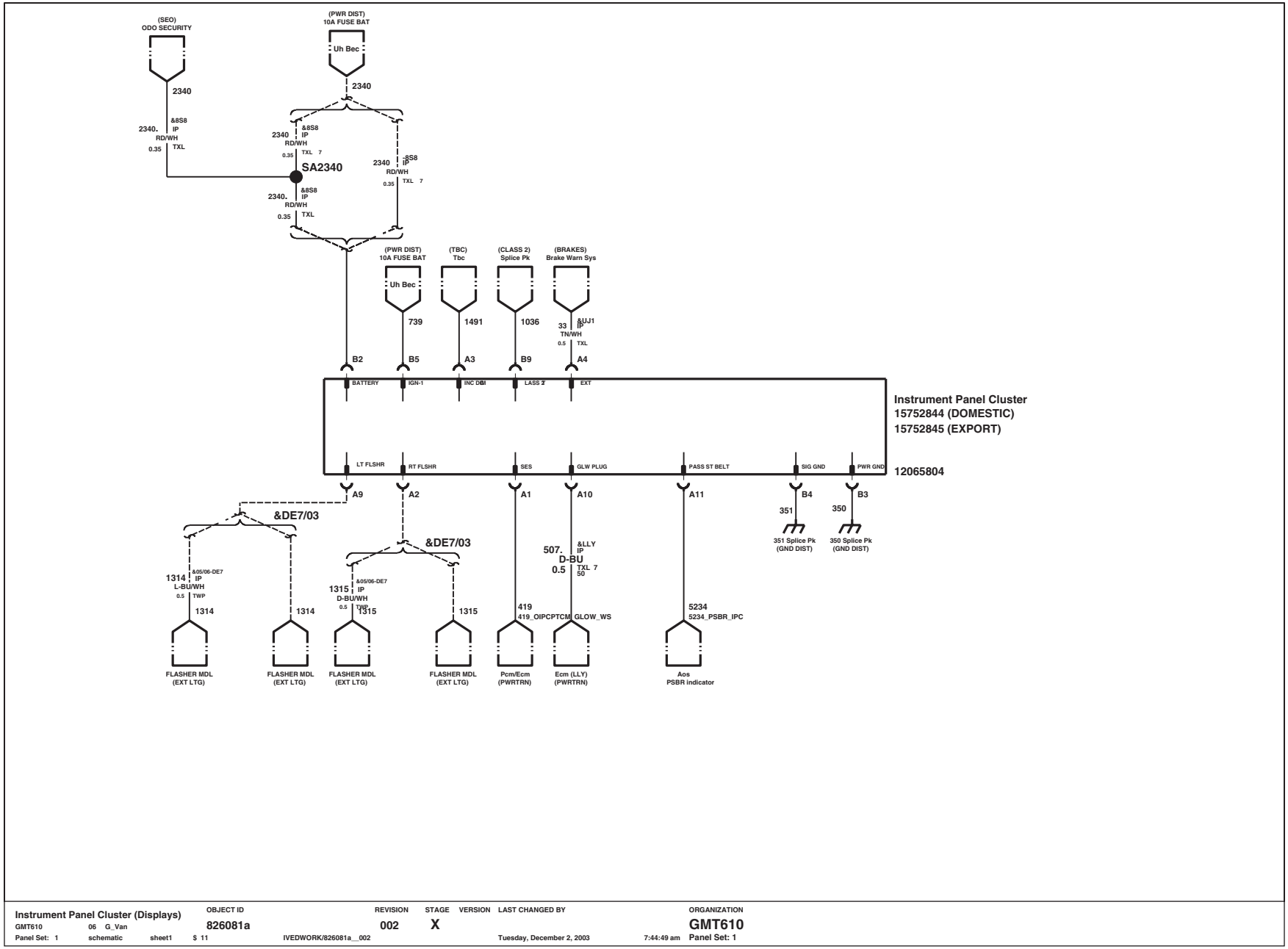

Instrument Panel Cluster (Displays)	OBJECT ID	REVISION	STAGE	VERSION	LAST CHANGED BY	ORGANIZATION
GMT610 06 G_Van	826081a	002	X			GMT610
Panel Set: 1 schematic sheet1 $ 11	IVEDWORK/826081a__002				Tuesday, December 2, 2003 7:44:49 am	Panel Set: 1

Wipers

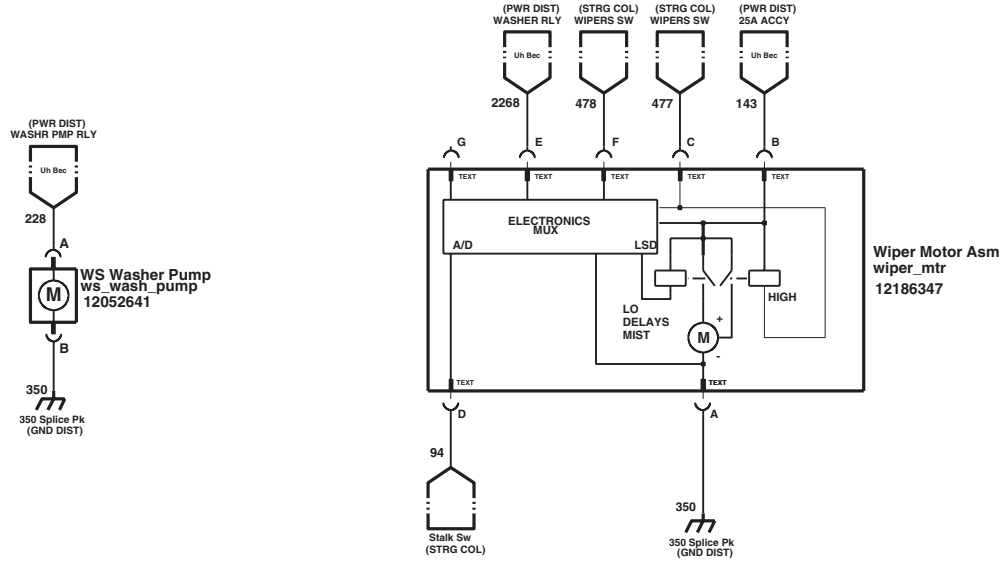

Wipers	OBJECT ID	REVISION	STAGE	VERSION	LAST CHANGED BY	ORGANIZATION
GMT610 06 G_Van	826091a	002	X			GMT610
Panel Set: 1 schematic sheet1 6	$IVEDWORK/826091a__002				Tuesday, December 2, 2003 8:01:49 am	Panel Set: 1

Exterior Lighting

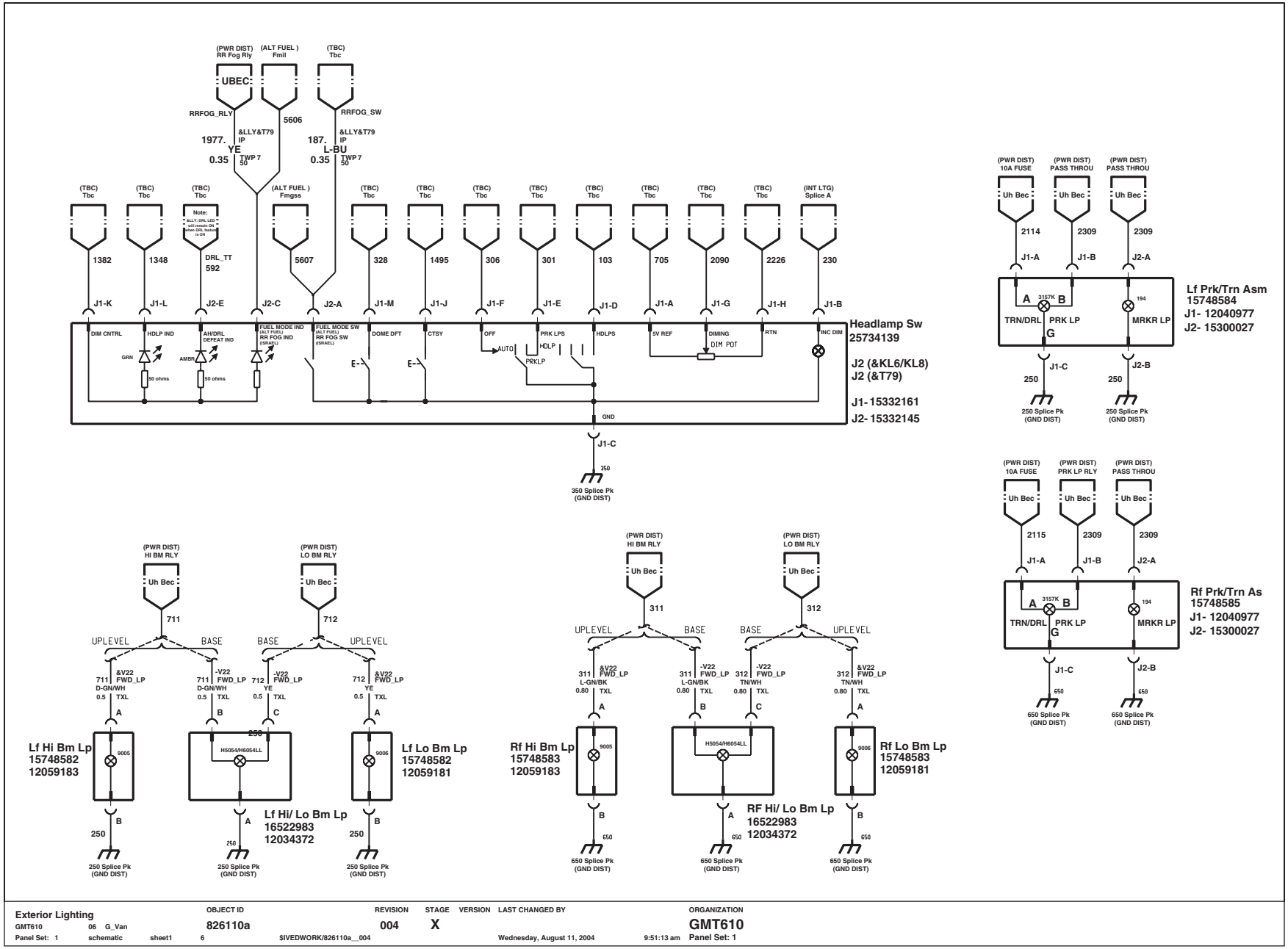

Exterior Lighting	OBJECT ID	REVISION	STAGE	VERSION	LAST CHANGED BY	ORGANIZATION
GMT610 06 G_Van	826110a	004	X			GMT610
Panel Set: 1 schematic sheet1 6	$IVEDWORK/826110a__004				Wednesday, August 11, 2004 9:51:13 am	Panel Set: 1

Exterior Lighting

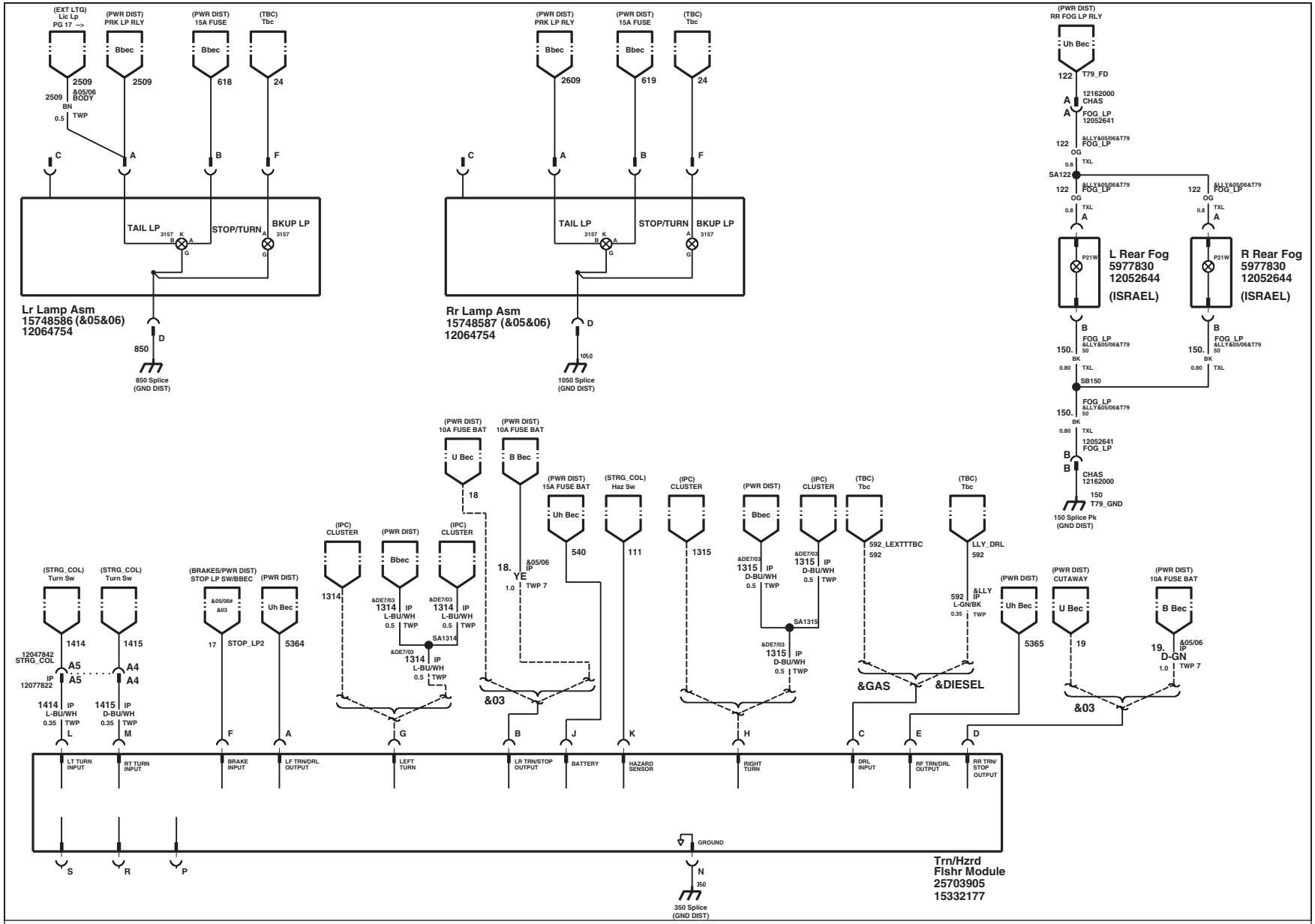

Exterior Lighting

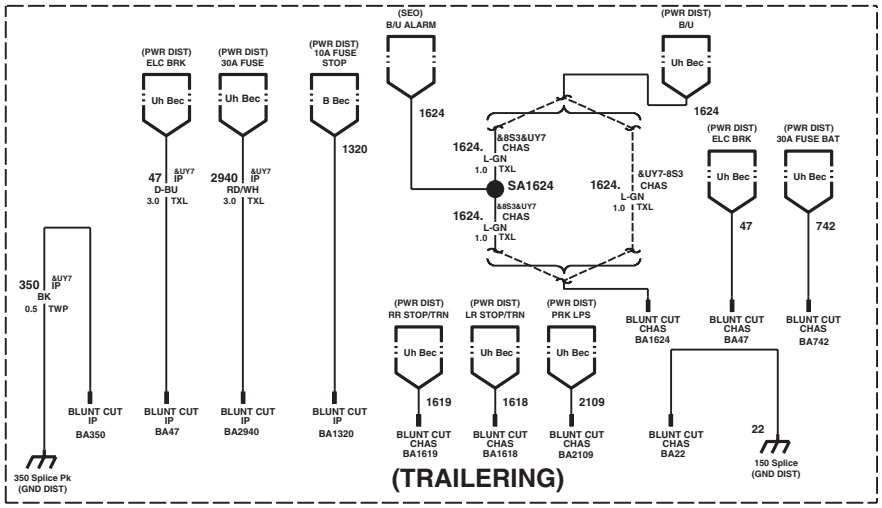

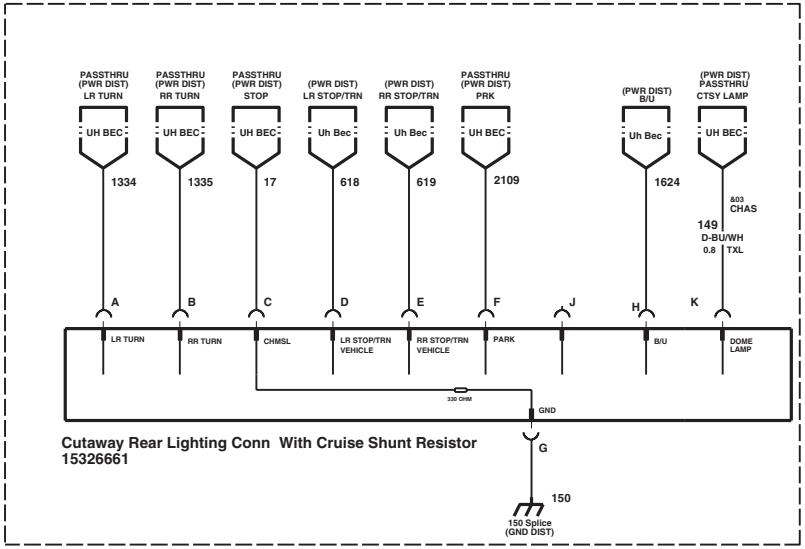

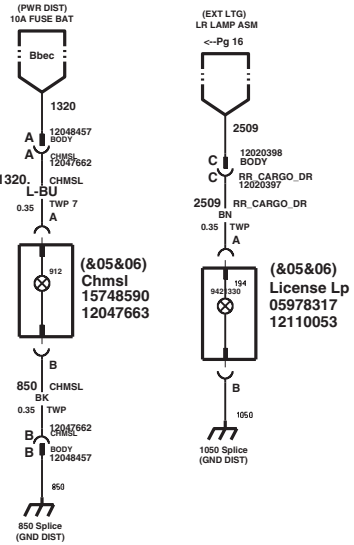

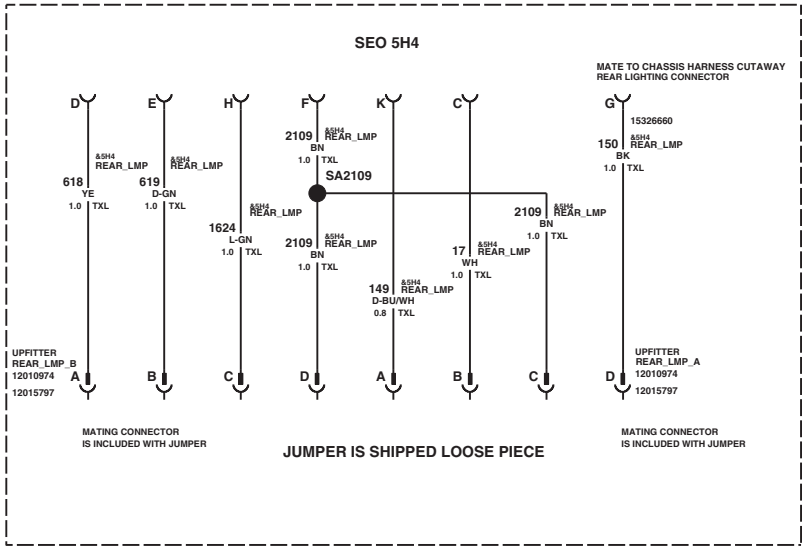

Exterior Lighting	OBJECT ID	REVISION	STAGE	VERSION	LAST CHANGED BY	ORGANIZATION
GMT610 06 G_Van	826110a	004	X			GMT610
Panel Set: 3 schematic sheet1 6	SIVEDWORK/826110a__004				Wednesday, August 11, 2004 9:51:13 am	Panel Set: 3

Power Windows

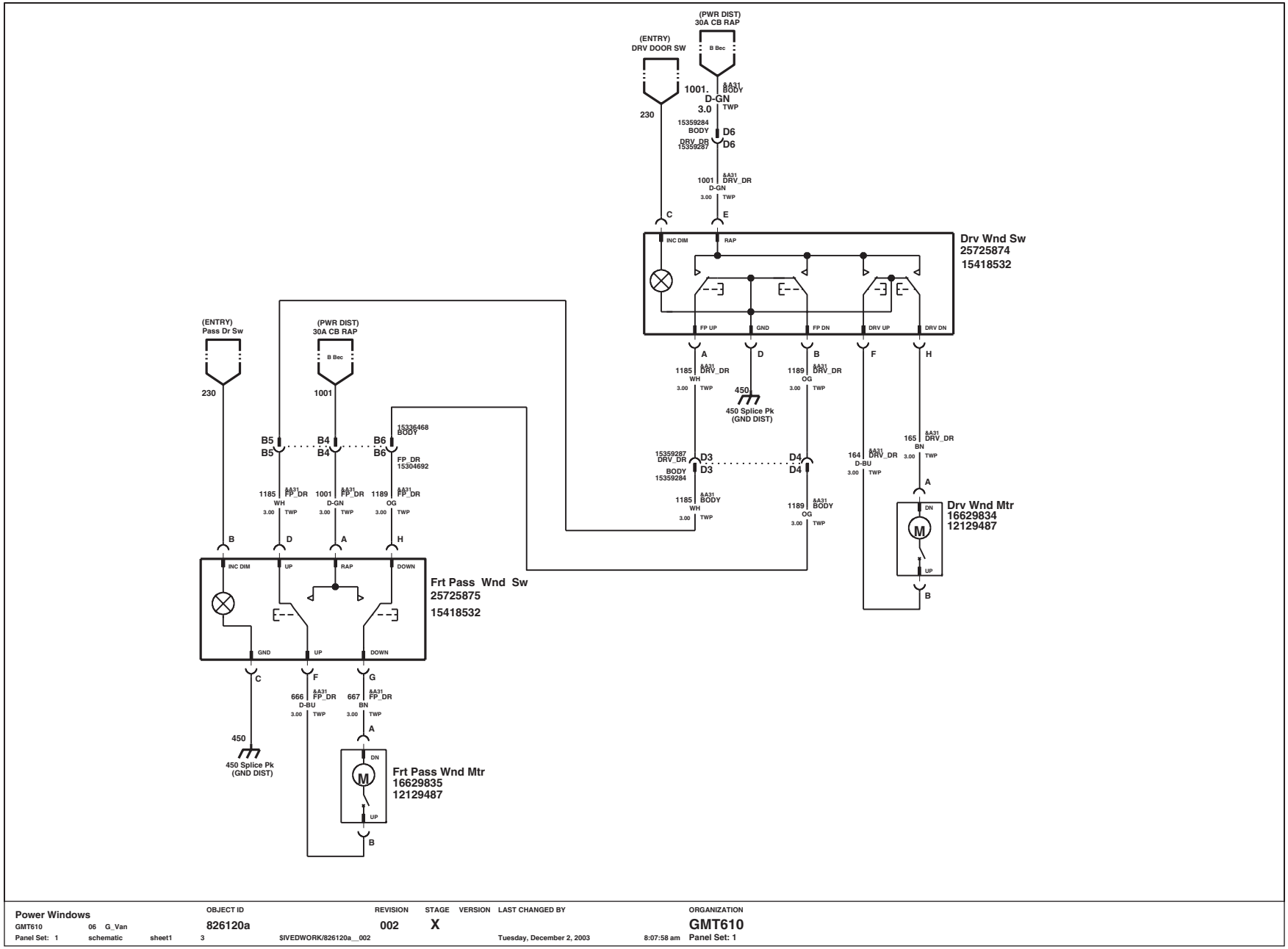

Power Windows	OBJECT ID	REVISION	STAGE	VERSION	LAST CHANGED BY	ORGANIZATION
GMT610 06 G_Van	826120a	002	X			GMT610
Panel Set: 1 schematic sheet1 3	$IVEDWORK/826120a__002				Tuesday, December 2, 2003 8:07:58 am	Panel Set: 1

Entry Control

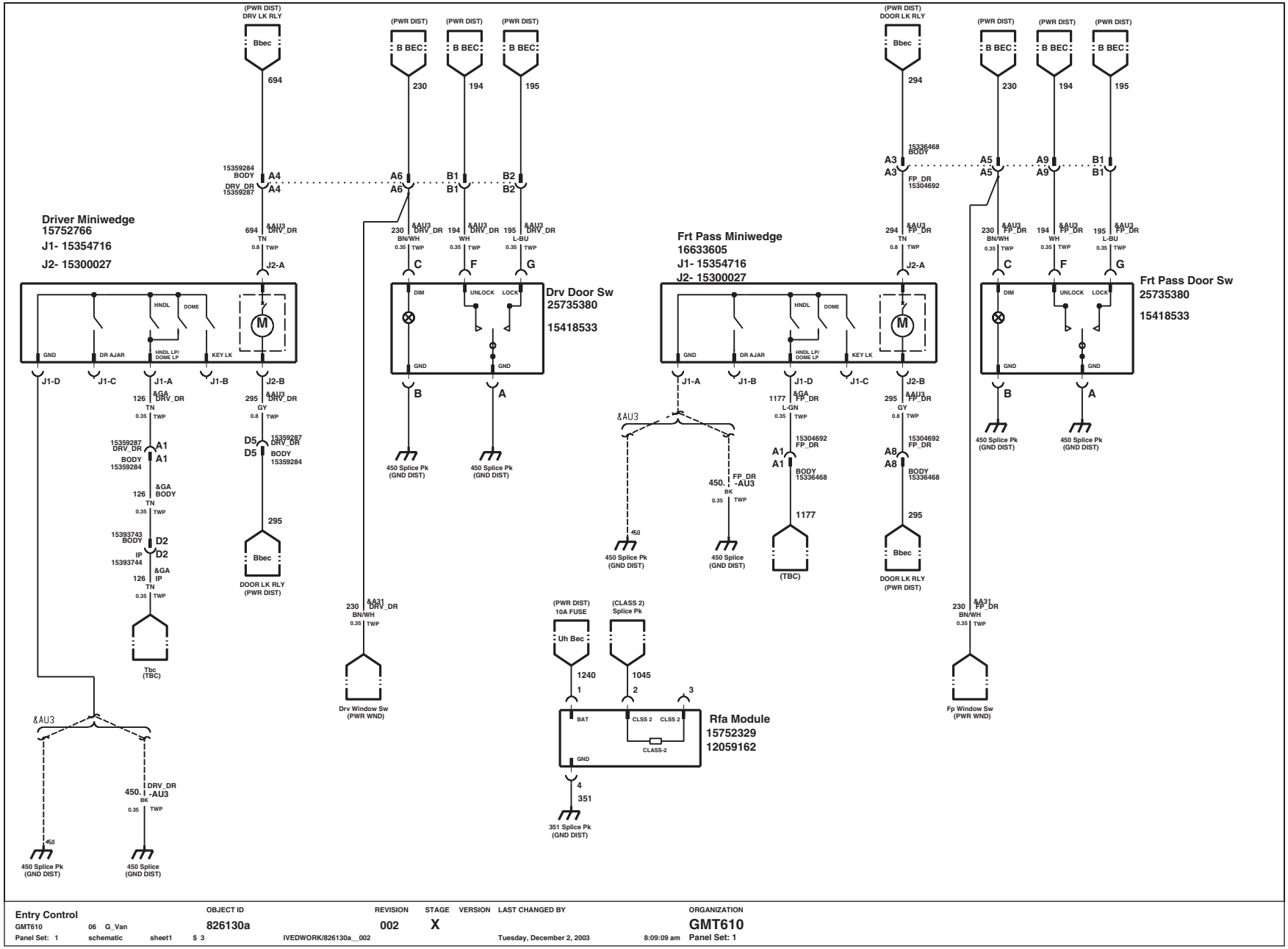

Entry Control

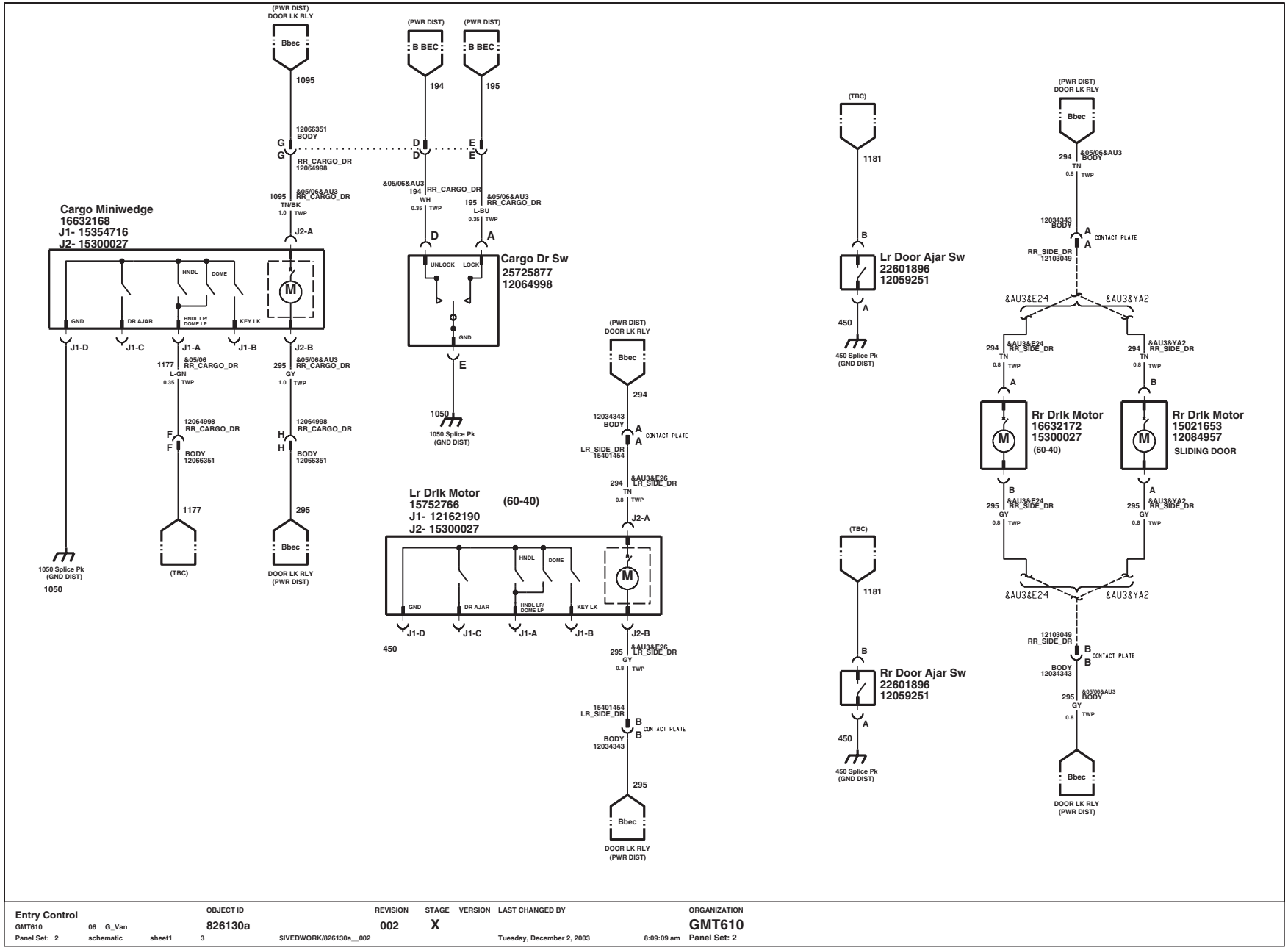

Power Seats

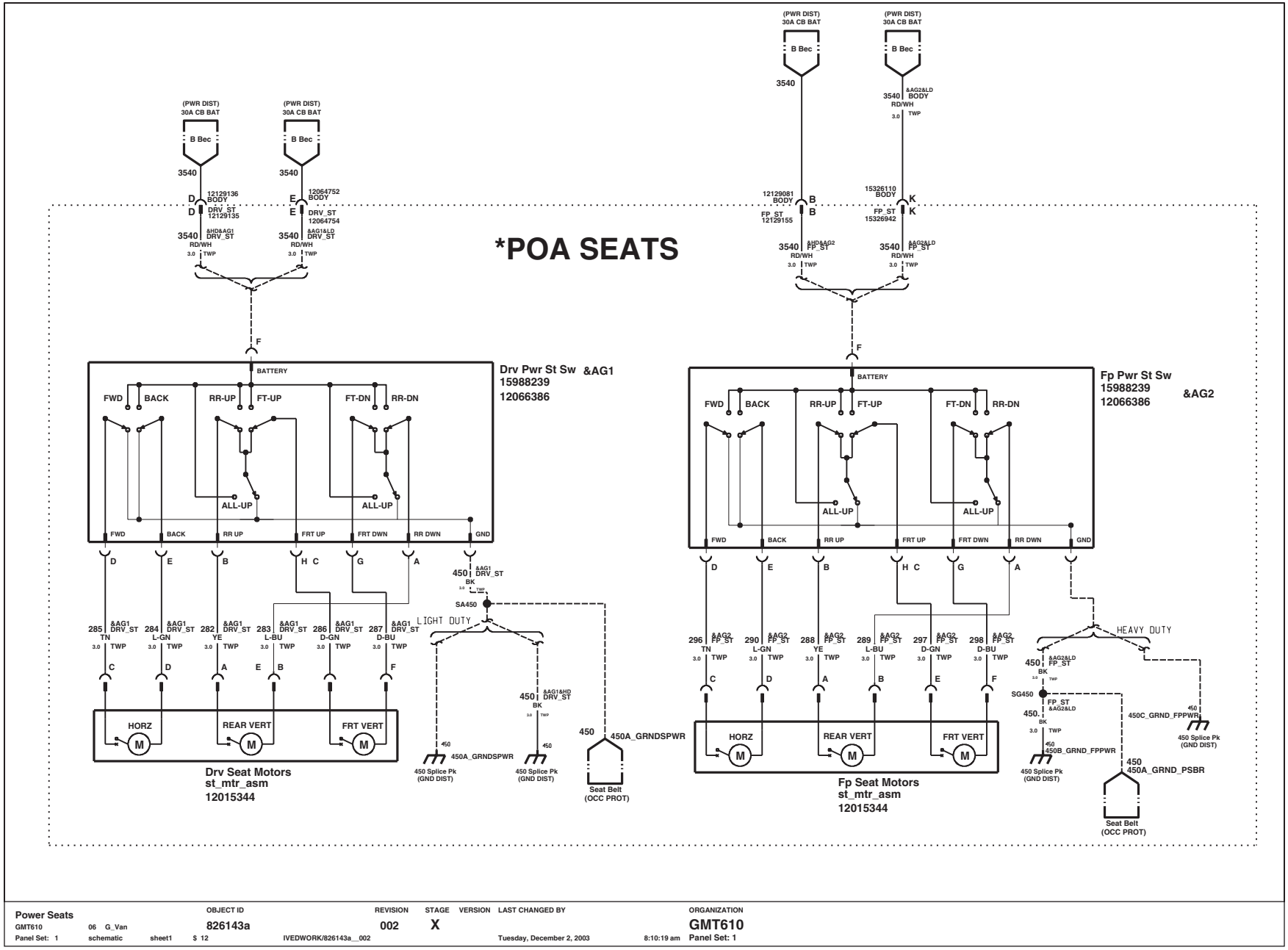

Power Seats	OBJECT ID	REVISION	STAGE	VERSION	LAST CHANGED BY	ORGANIZATION
GMT610 06 G_Van	826143a	002	X			GMT610
Panel Set: 1 schematic sheet1 $ 12	IVEDWORK/826143a__002				Tuesday, December 2, 2003 8:10:19 am	Panel Set: 1

Mirrors

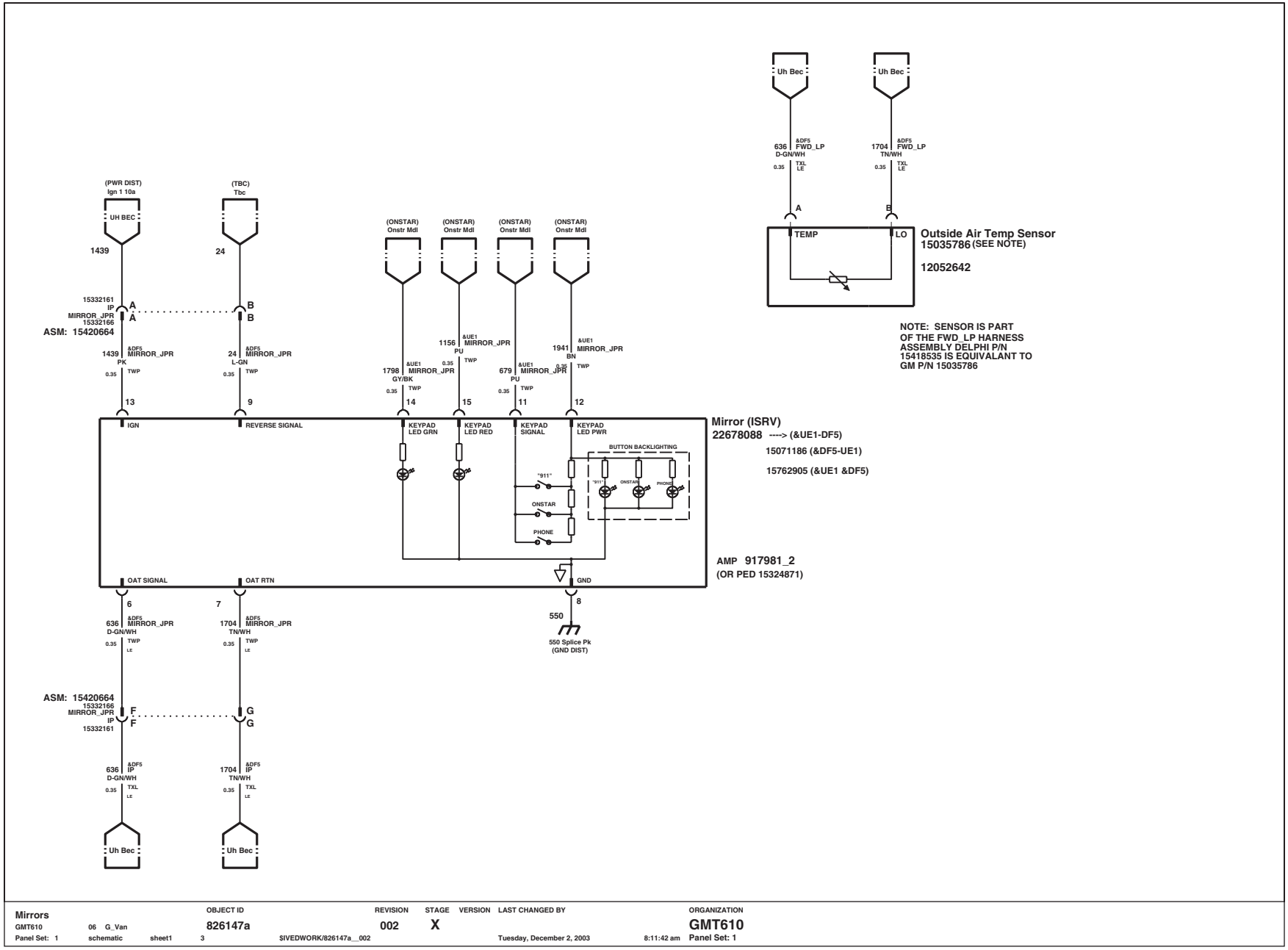
(PWR DIST) Ign 1 10a
UH BEC
1439
(TBC) Tbc
24
15332161 IP MIRROR_JPR 15332166
ASM: 15420664
1439 &DF5 MIRROR_JPR PK 0.35 TWP
24 &DF5 MIRROR_JPR L-GN 0.35 TWP
13
9
IGN
REVERSE SIGNAL
(ONSTAR) Onstr Mdl
1798 &UE1 MIRROR_JPR GY/BK 0.35 TWP
1156 &UE1 MIRROR_JPR PU 0.35 TWP
679 &UE1 MIRROR_JPR PU 0.35 TWP
1941 &UE1 MIRROR_JPR BN 0.35 TWP
14
15
11
12
KEYPAD LED GRN
KEYPAD LED RED
KEYPAD SIGNAL
KEYPAD LED PWR
BUTTON BACKLIGHTING
"911"
ONSTAR
PHONE
Mirror (ISRV)
22678088 ----> (&UE1-DF5)
15071186 (&DF5-UE1)
15762905 (&UE1 &DF5)
AMP 917981_2
(OR PED 15324871)
OAT SIGNAL
OAT RTN
GND
6
7
8
636 &DF5 MIRROR_JPR D-GN/WH 0.35 TWP LE
1704 &DF5 MIRROR_JPR TN/WH 0.35 TWP LE
550
550 Splice Pk (GND DIST)
ASM: 15420664
15332166 MIRROR_JPR IP 15332161
636 &DF5 IP D-GN/WH 0.35 TXL LE
1704 &DF5 IP TN/WH 0.35 TXL LE
Uh Bec
Uh Bec
636 &DF5 FWD_LP D-GN/WH 0.35 TXL LE
1704 &DF5 FWD_LP TN/WH 0.35 TXL LE
A
B
TEMP
LO
Outside Air Temp Sensor
15035786 (SEE NOTE)
12052642
NOTE: SENSOR IS PART OF THE FWD_LP HARNESS ASSEMBLY DELPHI P/N 15418535 IS EQUIVALANT TO GM P/N 15035786
Mirrors
GMT610 06 G_Van
Panel Set: 1 schematic sheet1 3
OBJECT ID 826147a
REVISION 002
STAGE X
VERSION
LAST CHANGED BY
$IVEDWORK/826147a__002
Tuesday, December 2, 2003 8:11:42 am
ORGANIZATION GMT610
Panel Set: 1

Mirrors

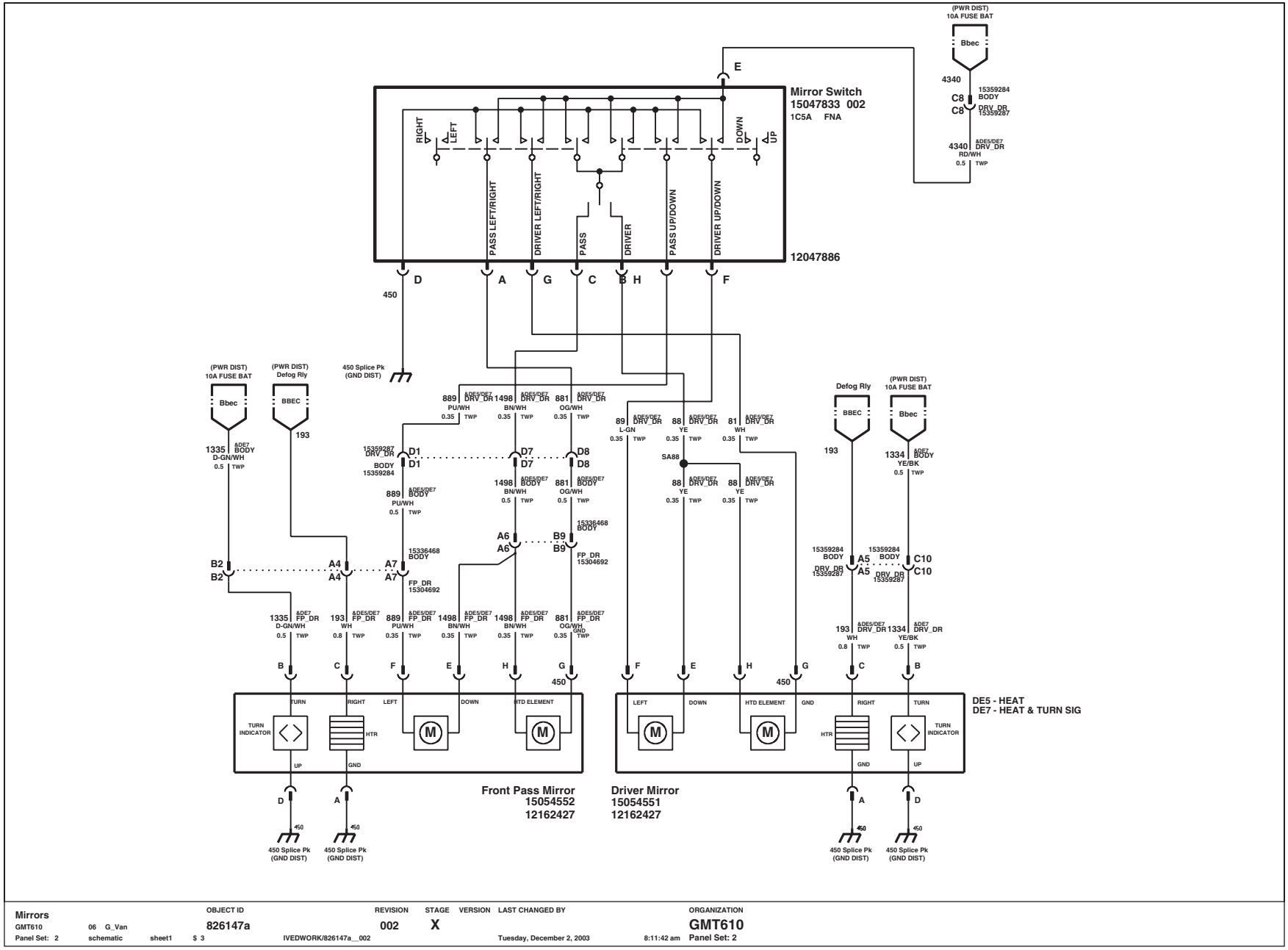

Mirrors	OBJECT ID	REVISION	STAGE	VERSION	LAST CHANGED BY	ORGANIZATION
GMT610 06 G_Van	826147a	002	X			GMT610
Panel Set: 2 schematic sheet1 $ 3	IVEDWORK/826147a__002				Tuesday, December 2, 2003 8:11:42 am	Panel Set: 2

Audio (Speakers)

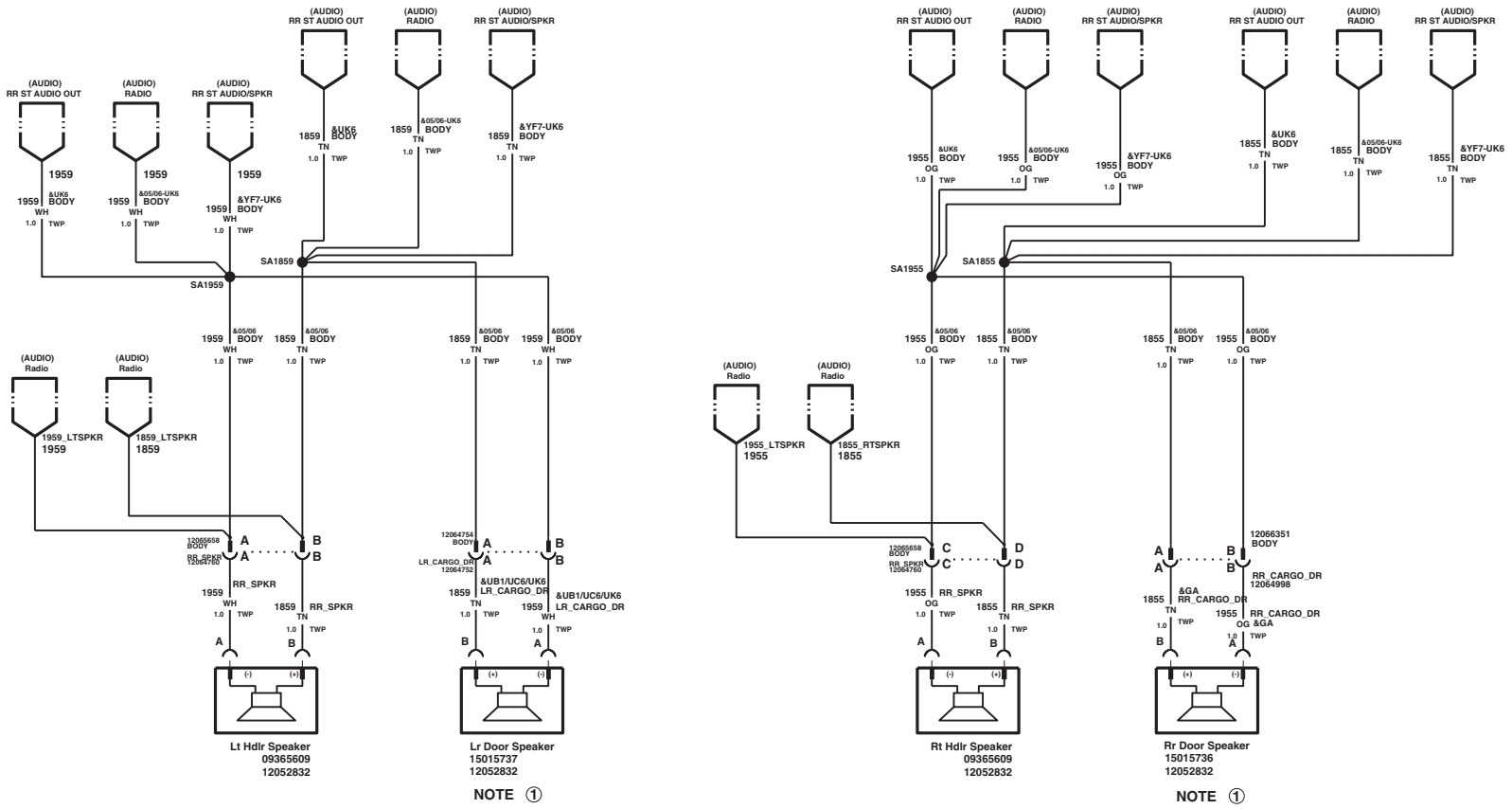

NOTE: ① NOT USED FOR UM7, & U1C

Audio (Speakers)	OBJECT ID	REVISION	STAGE	VERSION	LAST CHANGED BY	ORGANIZATION
GMT610 06 G_Van	826150a	002	X	0		GMT610
Panel Set: 1 schematic sheet1 6	$IVEDWORK/826150a__002				Tuesday, December 2, 2003 8:13:43 am	Panel Set: 1

Audio (Speakers)

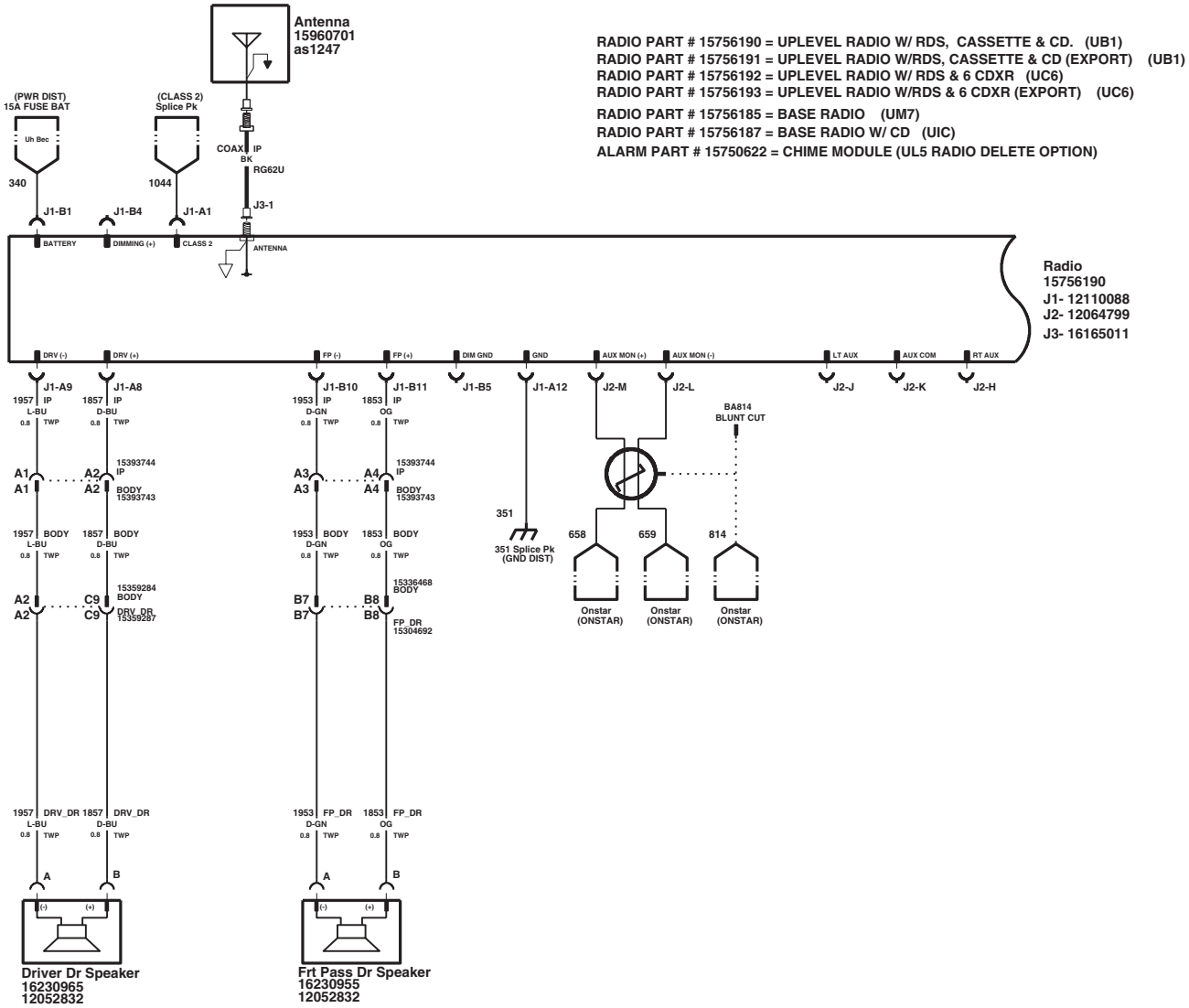

RADIO PART # 15756190 = UPLEVEL RADIO W/ RDS, CASSETTE & CD. (UB1)
RADIO PART # 15756191 = UPLEVEL RADIO W/RDS, CASSETTE & CD (EXPORT) (UB1)
RADIO PART # 15756192 = UPLEVEL RADIO W/ RDS & 6 CDXR (UC6)
RADIO PART # 15756193 = UPLEVEL RADIO W/RDS & 6 CDXR (EXPORT) (UC6)
RADIO PART # 15756185 = BASE RADIO (UM7)
RADIO PART # 15756187 = BASE RADIO W/ CD (UIC)
ALARM PART # 15750622 = CHIME MODULE (UL5 RADIO DELETE OPTION)

Audio (Speakers)	OBJECT ID	REVISION	STAGE	VERSION	LAST CHANGED BY	ORGANIZATION
GMT610 06 G_Van	826150b	002	X	0		GMT610
Panel Set: 1 schematic sheet1 $ 8	IVEDWORK/826150b__002				Tuesday, December 2, 2003 6:23:19 pm	Panel Set: 1

Audio (Speakers)

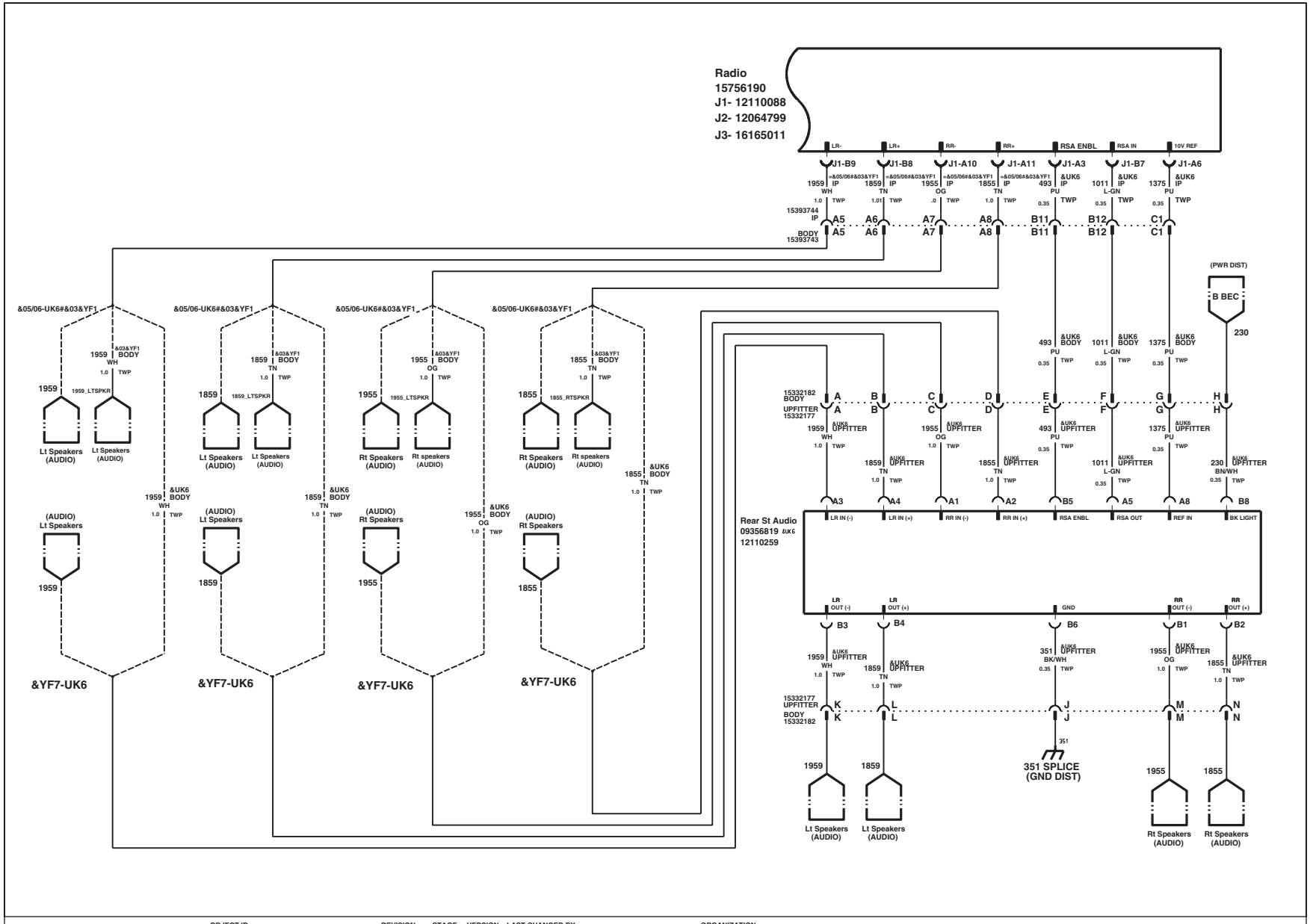

Audio (Speakers)	OBJECT ID	REVISION	STAGE	VERSION	LAST CHANGED BY	ORGANIZATION
GMT610 06 G_Van	826150b	002	X	0		GMT610
Panel Set: 2 schematic sheet1 $ 8	IVEDWORK/826150b__002				Tuesday, December 2, 2003 6:23:19 pm	Panel Set: 2

Steering Column Controls (Stalk Switch)

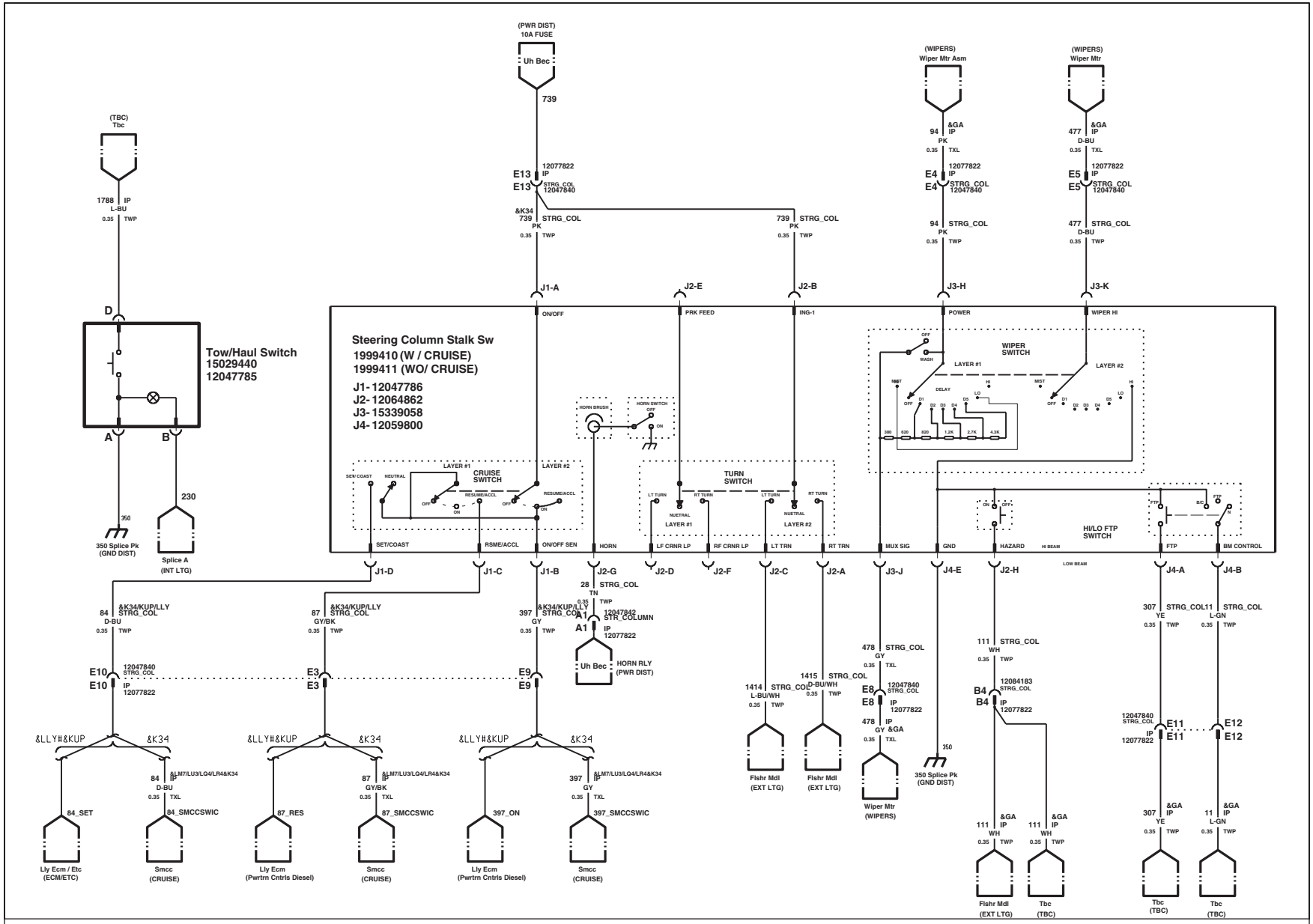

Steering Column Controls (Stalk Switch)	OBJECT ID	REVISION	STAGE	VERSION	LAST CHANGED BY	ORGANIZATION
GMT610 06 G_Van	826155a	002	X			GMT610
Panel Set: 1 schematic sheet1 4	$IVEDWORK/826155a__002				Tuesday, December 2, 2003 8:15:53 am	Panel Set: 1

Entertainment (OnStar)

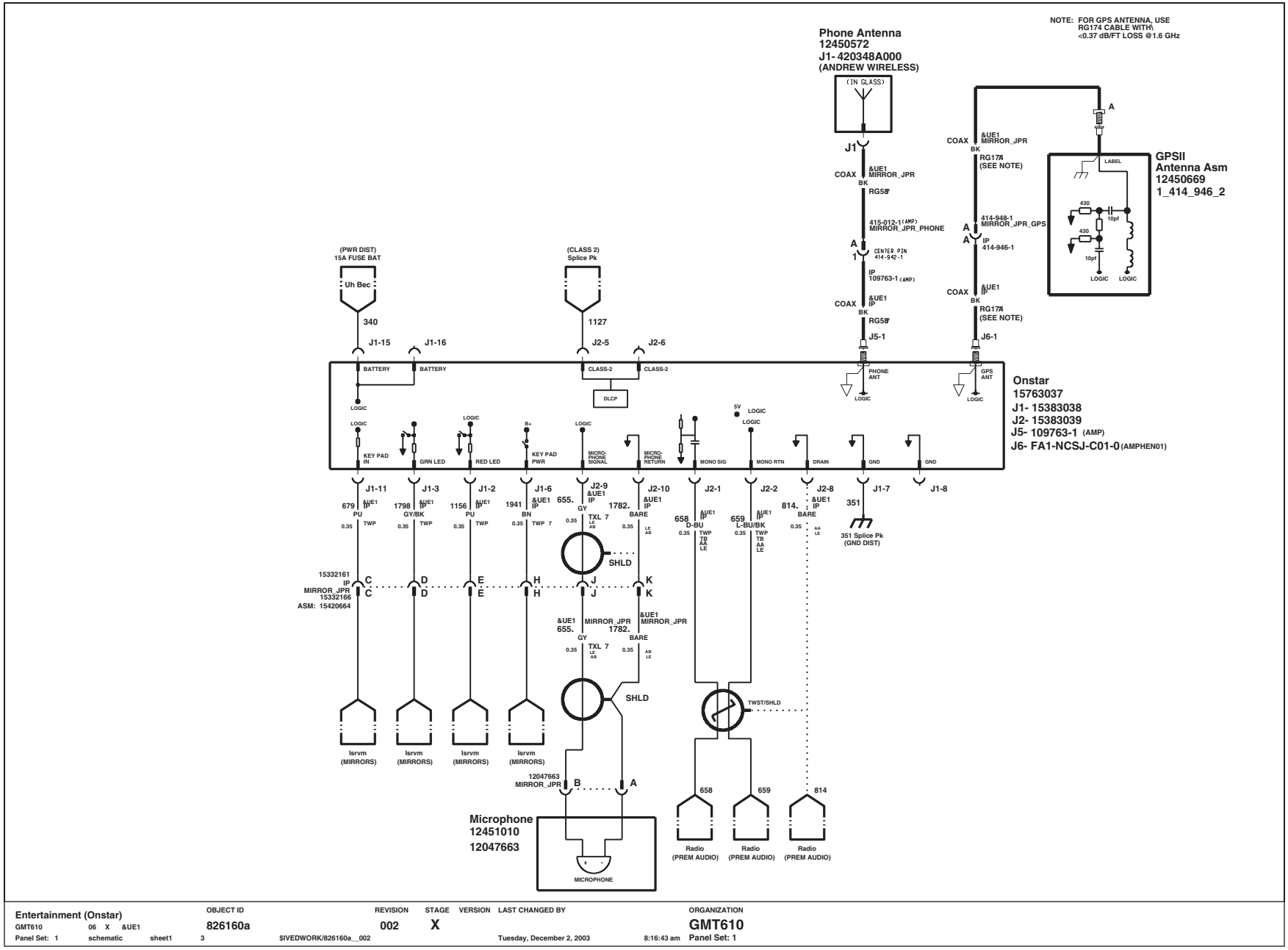

Entertainment (Onstar)	OBJECT ID	REVISION	STAGE	VERSION	LAST CHANGED BY	ORGANIZATION
GMT610 06 X &UE1	826160a	002	X			GMT610
Panel Set: 1 schematic sheet1 3	$IVEDWORK/826160a__002				Tuesday, December 2, 2003 8:16:43 am	Panel Set: 1

Special Equipment Options – 5G4 – Roof Mounted Lamp

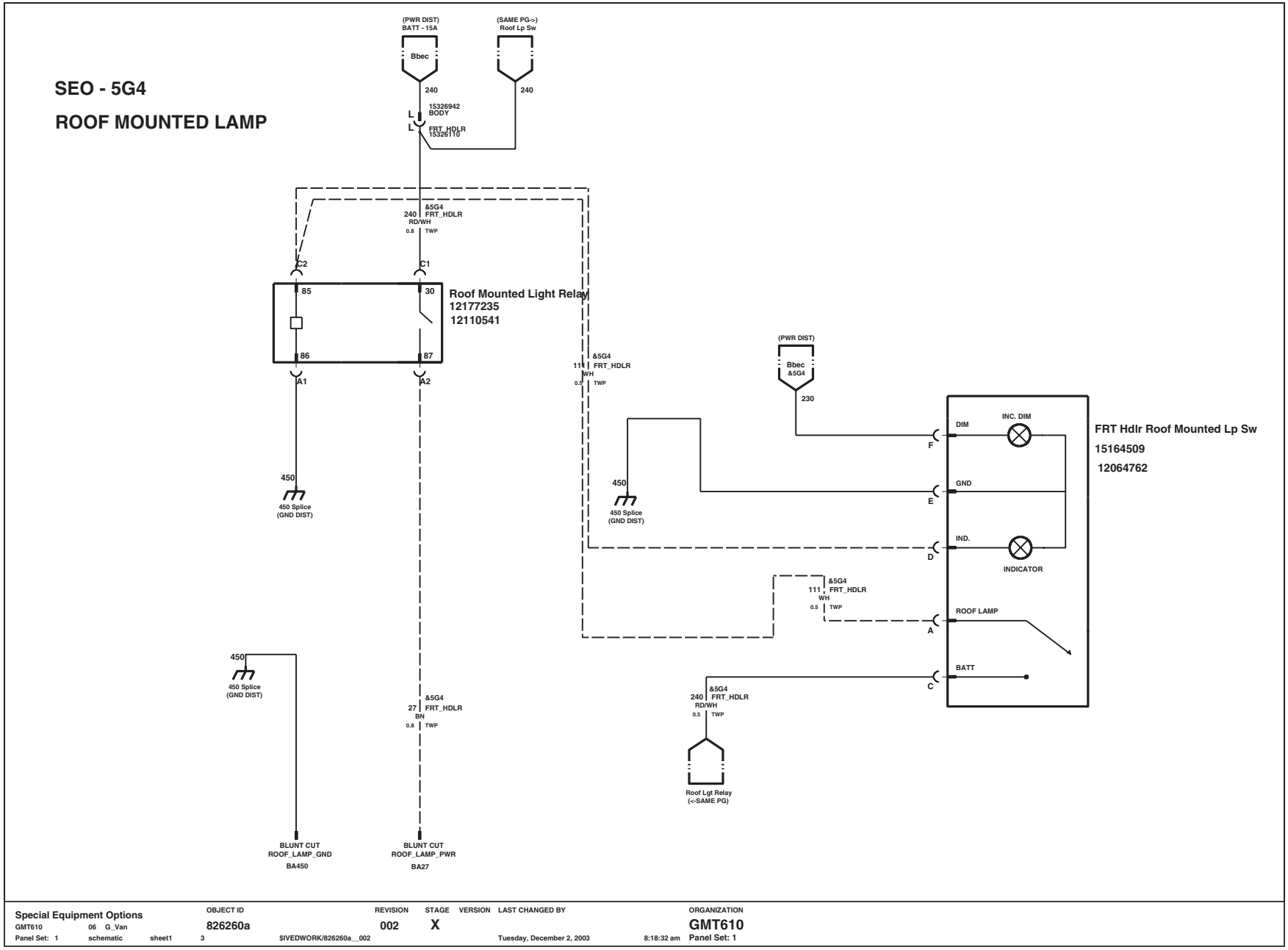

Special Equipment Options

INTENTIONALLY LEFT BLANK

Special Equipment Options	OBJECT ID	REVISION	STAGE	VERSION	LAST CHANGED BY	ORGANIZATION
GMT610 06 G_Van	826260a	002	X			GMT610
Panel Set: 2 schematic sheet1 3	$IVEDWORK/826260a__002				Tuesday, December 2, 2003 8:18:32 am	Panel Set: 2

Special Equipment Options – 8A2 – Dual Batteries

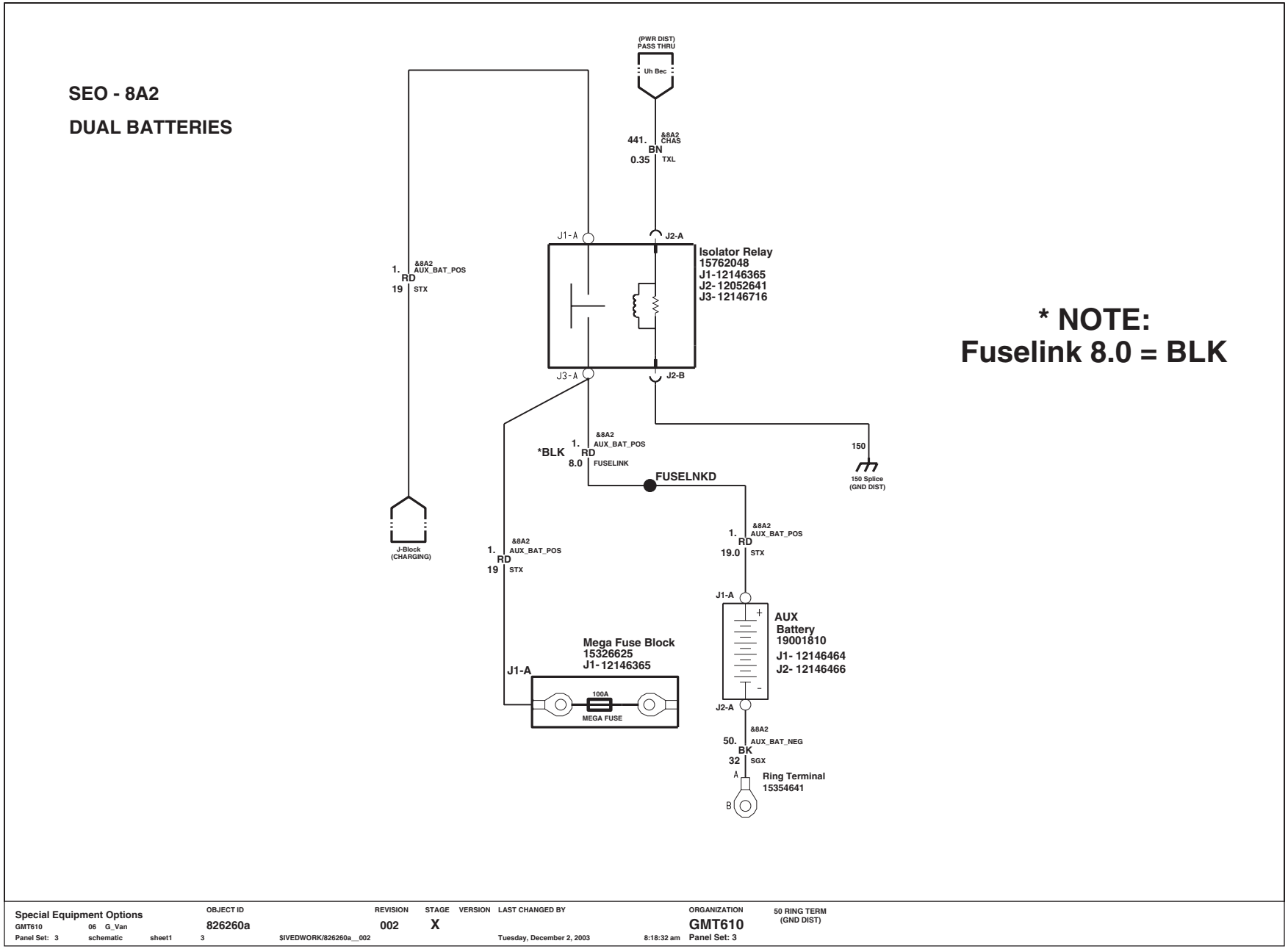

Special Equipment Options – 8J0 – Cooling Fan

SEO - 8J0

COOLING FAN

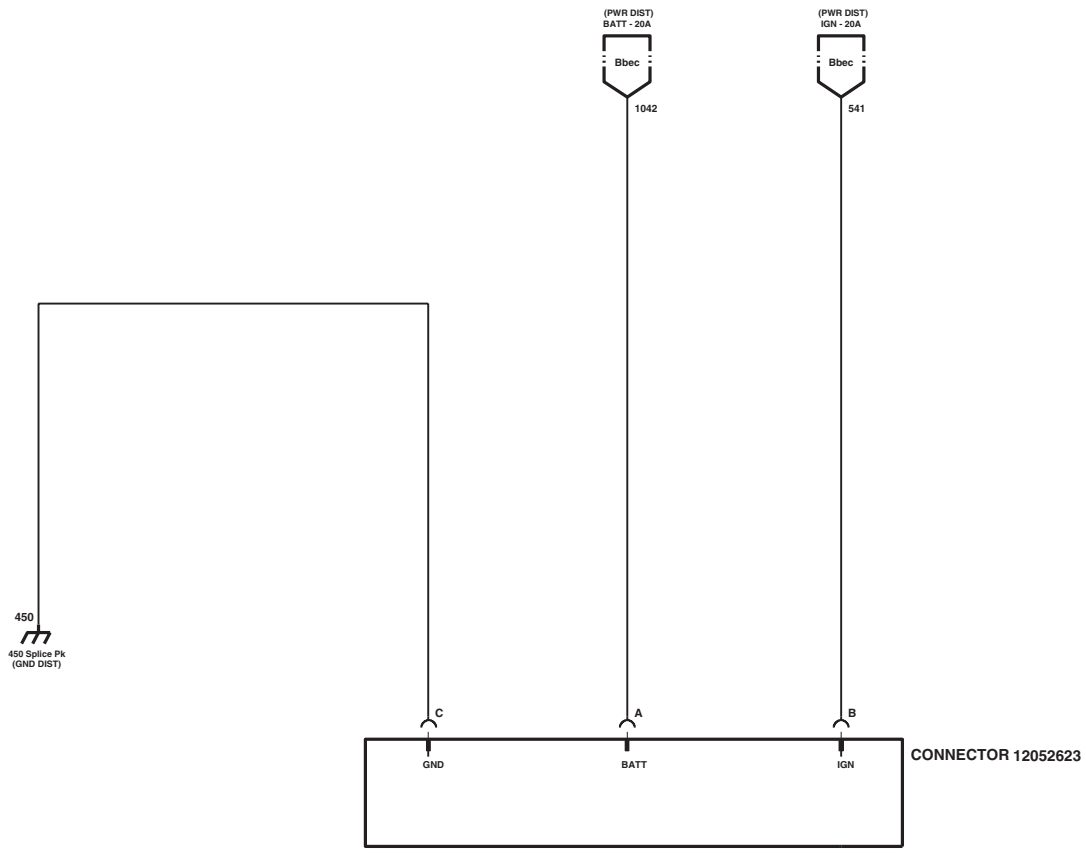

CONNECTOR AT TOP OF 'B' PILLAR - LEFT SIDE

Special Equipment Options	OBJECT ID	REVISION	STAGE	VERSION	LAST CHANGED BY	ORGANIZATION
GMT610 06 G_Van	826260a	002	X			GMT610
Panel Set: 4 schematic sheet1 $ 3	IVEDWORK/826260a__002				Tuesday, December 2, 2003 8:18:32 am	Panel Set: 4

Special Equipment Options – 8S3 – Backup Alarm

SEO - 8S3

BACK-UP ALARM

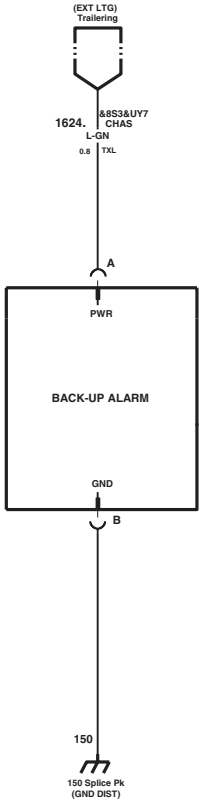

CONNECTOR 15300027

- B/U ALARM SUPPLIED BY GM
- MOUNTED ON LR FRAME

Special Equipment Options	OBJECT ID	REVISION	STAGE	VERSION	LAST CHANGED BY	ORGANIZATION
GMT610 06 G_Van	826260a	002	X			GMT610
Panel Set: 5 schematic sheet1 $ 3	IVEDWORK/826260a__002				Tuesday, December 2, 2003 8:18:32 am	Panel Set: 5

Special Equipment Options – 8S8 – Odo Security

SEO - 8S8

ODO SECURITY

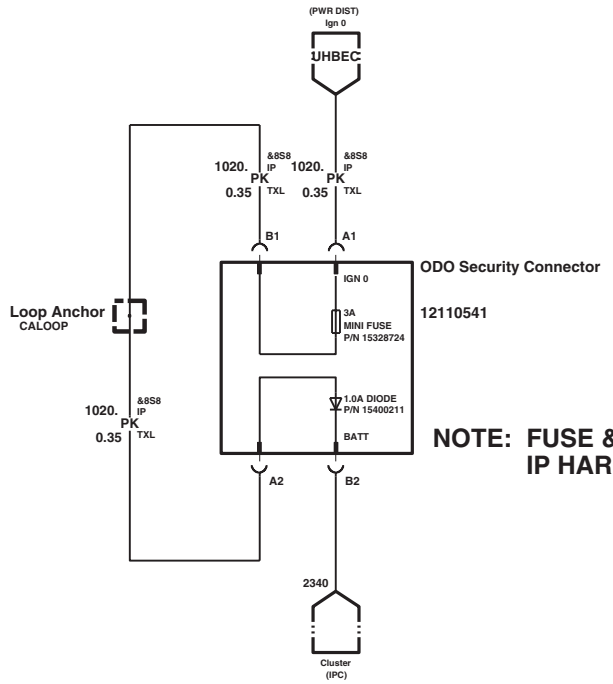

NOTE: FUSE & DODE ARE POA IP HARNESS.

Special Equipment Options	OBJECT ID	REVISION	STAGE	VERSION	LAST CHANGED BY	ORGANIZATION
GMT610 06 G_Van	826260a	002	X			GMT610
Panel Set: 6 schematic sheet1 $ 3	IVEDWORK/826260a__002				Tuesday, December 2, 2003 8:18:32 am	Panel Set: 6

Special Equipment Options – 9B9, 9B4 – Road Speed Governor

NON-INTELLIGENT

SEO - 9B9, 9D4
ROAD SPEED
GOVERNOR

FOR REFERENCE ONLY. WILL RELEASE EXISTING IP HARNESS WITH K34 - SEE CRUISE CONTROL MECH.

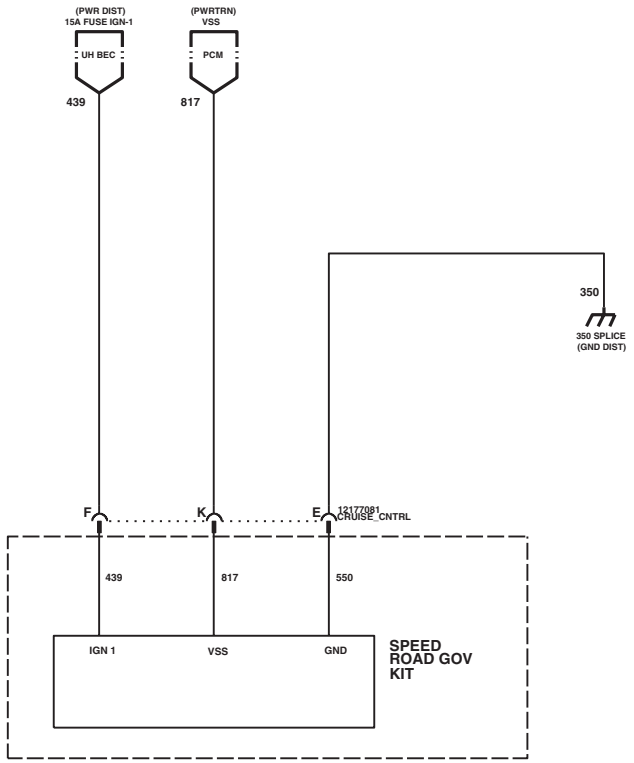

Special Equipment Options	OBJECT ID	REVISION	STAGE	VERSION	LAST CHANGED BY	ORGANIZATION
GMT610 06 G_Van	826260a	002	X			GMT610
Panel Set: 7 schematic sheet1 $ 3	IVEDWORK/826260a__002				Tuesday, December 2, 2003 8:18:32 am	Panel Set: 7

Special Equipment Options – 9L0 – Computer Screen Blanking

SEO - 9L0

COMPUTER SCREEN BLANKING

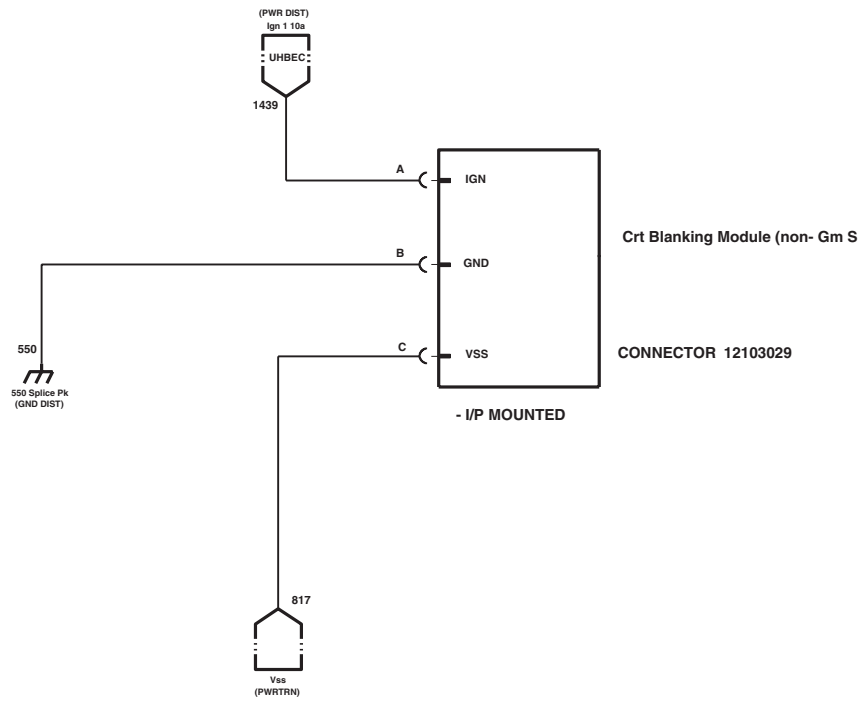

Special Equipment Options	OBJECT ID	REVISION	STAGE	VERSION	LAST CHANGED BY	ORGANIZATION
GMT610 06 G_Van	826260a	002	X			GMT610
Panel Set: 8 schematic sheet1 $ 3	IVEDWORK/826260a__002				Tuesday, December 2, 2003 8:18:32 am	Panel Set: 8

Special Equipment Options – &9L4 – Mobile Radio

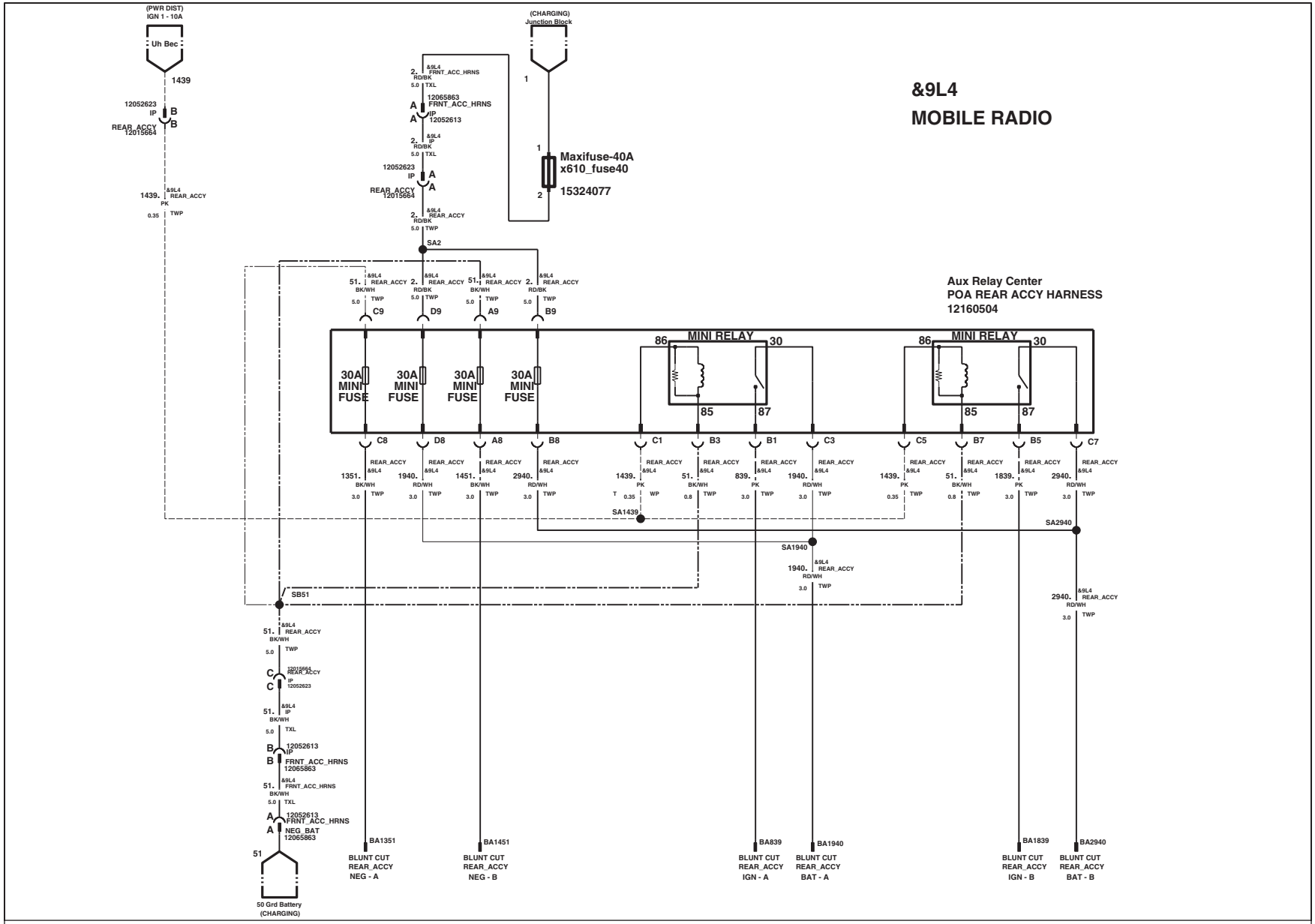

Master System

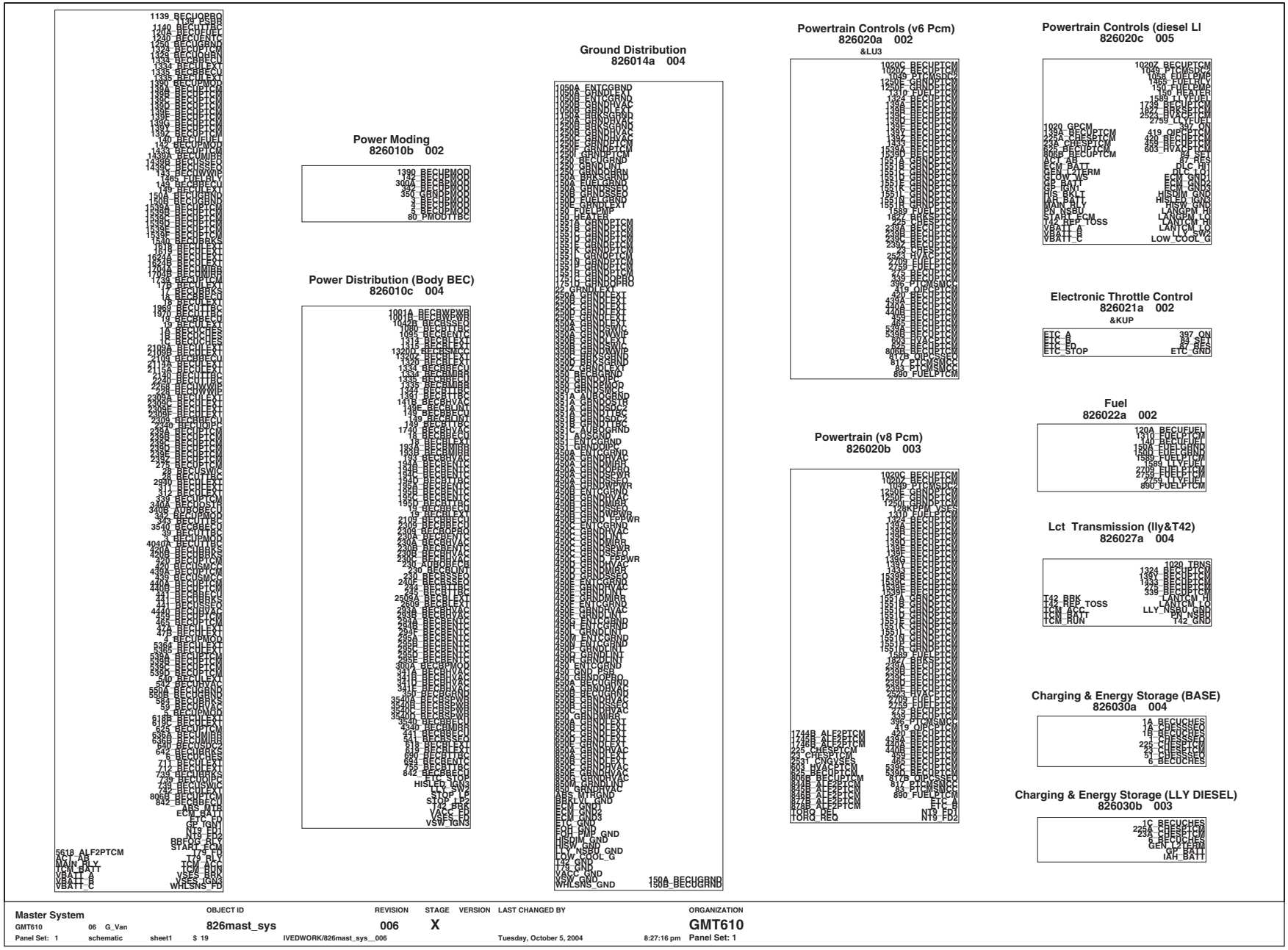

Master System	OBJECT ID	REVISION	STAGE	VERSION	LAST CHANGED BY	ORGANIZATION
GMT610 06 G_Van	826mast_sys	006	X			GMT610
Panel Set: 1 schematic sheet1 $ 19	IVEDWORK/826mast_sys__006				Tuesday, October 5, 2004 8:27:16 pm	Panel Set: 1

Master System

Stepper Motor Cruise Control
826034a 002

&LM7/LQ4/LR4/LH3
1320Q_BECBSMCC
7_BRKBSMCC
350_GRNDPTRCC
395_PTCMSMCC
397_SMCCSWIC
420_BECLSMCC
459_BECBSMCC
817_PTCMSMCC
83_PTCMSWIC
84_SMCCSWIC
87_SMCCSWIC

Horns
826040a 002

1250_GRNDOHRN
1329_BECOHRN

Brakes (ABS)
826044a 003

1122_BRKSSDC2
1134_BRKSSDC2
1150B_BRKSGRND
1250B_BRKSGRND
1530A_BRKSGRND
10_BECUBRKS
17_BRKSSWCC
1827C_BRKSPCM
35_BRKSGRNDC
350C_BRKSGRND
350D_BRKSGRND
420A_BECUBRKS
420B_BECUBRKS
491_BECUBRKS
594_BECUBRKS
679_BECUBRKS
735_BECUBRKS
STOP_LP
STOP_LP2

Vses W/ ABS
826044b 002

128KPPM_VSES
ABS_MTR
ABS_MTRGND
TORQ_DEL
BRKLINT
TORQ_REQ
VSES_BRK
VSES_BKLT
VSES_PLS
VSES_FD
VSES_IGN3
VSW_IGN3
WHLSNS_FD
WHLSNS_GND

Occupant Protection
826047a 002

1128_OPBOSDC2
1138A_BECOPBRO
1308_BECOPBRO
230_LINTOPRO
450A_GRNDOPRO
450A_GRND_PSBR
450_GRND_PSB
450_GRNDOPRO
450_OPBOSPWR
501B_DATA
1751C_GRNDOPRO
1751D_GRNDOPRO

Automatic Occupant Supression
826048a 002

1139_AOS
1139_PSBR
351_AOSGND
501B_DATA
5234_PSBR_IPC

Serial Data (Class 2)
826050a 003

1036_OIPCSDC2
1037_SDC2TTBC
1044_AUXCSTBC
1045_ENTCSDC2
1045_PTCMSDC2
1132_BRKSSDC2
1132_PSBRSDC2
1128_OPBOSDC2
351B_GRNDSDC2
351B_GRNDSDC2
640_BECUSDC2
DLC_HI
LANFOH_HI
DLC_LO
LANFOH_LO
VSES_CL2

Truck Body Controller
826051a 002

1020_BECUTTBC
1037_SDC2TTBC
110_LEXTTBC
1097_BECUTTBC
1133_BRKSTTBC
1136_LEXTTBC
1177A_ENTCTTBC
1177B_ENTCTTBC
1181A_ENTCTTBC
1181B_ENTCTTBC
11_SWCTTBC
126_ENTCTTBC
1344_BECBTTBC
1348_LEXTTBC
1391_BECBTTBC
1391_DIPCTTBC
1494_LEXTTBC
149_BECBTTBC
1732A_LINTTBC
1732B_LINTTBC
1732C_LINTTBC
178B_SWICTTBC
1940_BECBTTBC
1950_BECBTTBC
1966_BECUTTBC
1971_BECBTTBC
2090_LEXTTBC
2128_BECBTTBC
2229_LEXTTBC
2230_BECUTTBC
230_LINDTTBC
244_BECBTTBC
245_BECBTTBC
24A_LEXTTBC
24B_LEXTTBC
23_WIPDTTBC
28_BECUTTBC
301_LEXTTBC
304_LEXTTBC
305_SWICTTBC
307_LEXTTBC
343_BECUTTBC
351A_GRNDTTBC
351B_GRNDTTBC
39_BECUTTBC
4040A_BECUTTBC
432_LEXTTBC
69F_BECBTTBC
705_LEXTTBC
72F_BECBTTBC
80_PWCTTBC
DBL_LT
LLY_DRL
111_SWICTTBC
RREQG_SW
1382B_LEXTTTBC
T79_RLY

Heating & Cooling (HVAC)
826065a 004

1050B_GRNDHVAC
1250A_GRNDHVAC
1250C_GRNDHVAC
1311B_BECBHVAC
1740_BECBHVAC
1792_BECBHVAC
2308A_BECBHVAC
2308B_BECBHVAC
230C_BECBHVAC
230C_HVACLINT
2524_HVACPTCM
2924_BECBHVAC
2939_BECBHVAC
3177_BECBHVAC
3178_BECBHVAC
3179_BECBHVAC
3412_BECBHVAC
3440_BECBHVAC
450A_GRNDHVAC
450B_GRNDHVAC
450C_GRNDHVAC
450D_GRNDHVAC
450E_GRNDHVAC
450F_GRNDHVAC
532_BECBHVAC
550A_GRNDHVAC
550B_GRNDHVAC
550C_GRNDHVAC
53_BECBHVAC
6212_HVACPTCM
850A_GRNDHVAC
850B_GRNDHVAC
850C_GRNDHVAC
850D_GRNDHVAC
850_GRNDHVAC
FOH_BATT
FOH_GND
FOH_PMP_GND
LANFOH_HI
LANFOH_LO
LANGPM_HI
LANGPM_LO
VACC_FB
VACC_GND

Instrument Panel Cluster (Disp
826081a 002

1036_OIPCSDC2
1374B_LEXTOIPC
1374C_LEXTOIPC
1375B_LEXTOIPC
1375C_LEXTOIPC
1491_DIPCOIPC
2341_BECOIPC
2340_DIPCSEQ
33_BRKSOIPC
350_GRNDOIPC
351_GRNDOIPC
419_OIPCPTCM
5234_PSBR_IPC
739_BECOIPC
GLOW_WS

Wipers
826091a 002

143_BECUWWIP
2268_BECUWWIP
228_SWICWWIP
350A_GRNDWWIP
350B_GRNDWWIP
477_SWICWWIP
478_SWICWWIP
94_SWICWWIP

Exterior Lighting
826110a 004

103_LEXTTTBC
1050A_GRNDLEXT
1050B_GRNDLEXT
111_LEXISWIC
1314B_LEXTOIPC
1314C_LEXTOIPC
1314_BECBLEXT
1315B_LEXTOIPC
1315C_LEXTOIPC
1316_BECBLEXT
1320Z_BECBLEXT
1330_BECBLEXT
1334_BECBLEXT
1338_BECBLEXT
1335_BECBLEXT
1348B_LEXTTBC
1382B_LEXTTTBC
1414_LEXISWIC
1415_LEXISWIC
1494_LEXTTBC
149_BECBLEXT
150E_GRNDLEXT
1618_BECBLEXT
1619_BECBLEXT
1624A_BECBLEXT
1624B_LEXTSEQ
1624B_BECBLEXT
17B_BECBLEXT
18_BECBLEXT
18_BECBLEXT
19_BECBLEXT
19_BECBLEXT
2090_LEXTTBC
2109B_BECBLEXT
2109C_BECBLEXT
2118A_BECBLEXT
2118A_BECBLEXT
22A_BECBLEXT
2229_LEXTTBC
GRNDLEXT
2305A_BECBLEXT
2305C_BECBLEXT
2305D_BECBLEXT
2305E_BECBLEXT
230A_LEXDIMT
23B_LEXTTBC
2509A_BECBLEXT
250A_GRNDLEXT
250B_GRNDLEXT
250C_GRNDLEXT
250D_GRNDLEXT
250E_GRNDLEXT
2609_BECBLEXT
2530_BECBLEXT
301_LEXTTBC
306_LEXTTBC
311_BECBLEXT
312_BECBLEXT
320_LEXTTBC
350A_GRNDLEXT
350B_GRNDLEXT
350Z_GRNDLEXT
479_BECBLEXT
478_BECBLEXT
5362_BECBLEXT
5365_BECBLEXT
5392_BECBLEXT
550B_ALEZEXT
550Z_ALEZEXT
580_LEXTTBC
618B_BECBLEXT
618_BECBLEXT
619C_BECBLEXT
619_BECBLEXT
650A_GRNDLEXT
650B_GRNDLEXT
650C_GRNDLEXT
650D_GRNDLEXT
650E_GRNDLEXT
705_LEXTTBC
711_BECBLEXT
714_BECBLEXT
742_BECBLEXT
850A_GRNDLEXT
850B_GRNDLEXT
DBL_LT
LLY_DRL
RREQG_RLY
RREQP_SW
STOP_LP
T79_FD
T79_GND

Interior Lighting
826114a 003

1250_GRNDLINT
1495_BECBLINT
139_BECBLINT
1732A_LINTTBC
1732B_LINTTBC
1732C_LINTTBC
230A_LINTLINT
230C_HVACLINT
230_BECBLINT
230_LINTOPRO
230_LINISWIC
230_LINTTBC
450C_GRNDLINT
450E_GRNDLINT
450F_GRNDLINT
450_GRNDLINT
450B_GRNDLINT
450D_GRNDLINT
450G_GRNDLINT
850M_GRNDLINT
HS_BKLT
VSES_BKLT

Power Windows
826120a 002

1001A_BECBWPWR
1001B_BECBWPWR
230_ENTCWPWR
230D_ENTCWPWR
450A_GRNDWPWR
450B_GRNDWPWR

Entry Control
826130a 002

1045_ENTCSDC2
1050A_ENTCGRND
1050B_ENTCGRND
109B_BECBENTC
1177B_ENTCTTBC
1181A_ENTCTTBC
1181B_ENTCTTBC
124B_BECUENTC
126_ENTCTTBC
1342B_BECBENTC
1348_BECBENTC
1394_BECBENTC
195A_BECBENTC
195B_BECBENTC
195C_BECBENTC
230A_BECBENTC
230B_BECBENTC
230C_ENTCWPWR
230D_ENTCWPWR
231A_BECBENTC
231B_BECBENTC
232_BECBENTC
235A_BECBENTC
235B_BECBENTC
235C_BECBENTC
235D_BECBENTC
235E_BECBENTC
357_ENTCGRND
450A_ENTCGRND
450B_ENTCGRND
450C_ENTCGRND
450D_ENTCGRND
450E_ENTCGRND
450G_ENTCGRND
450H_ENTCGRND
450M_ENTCGRND
450N_ENTCGRND
1177A_ENTCTTBC
450_ENTCGRND
694_BECBENTC

Power Seats
826143a 002

3540A_BECBSPWR
3540C_BECBSPWR
3540D_BECBSPWR
450A_GRNDSPWR
450B_GRND_FSPWR
450C_GRNDSPWR
450A_GRND_PSBR
450C_GRND_FPPWR

Mirrors
826147a 002

1156_MIRROSTB
1434_BECBMIRR
1435_BECBMIRR
1436A_BECBMIRR
1436B_BECBMIRR
1704B_BECBMIRR
1798_MIRROSTB
1938_BECBMIRR
1938B_BECBMIRR
1931_MIRROSTB
24_MIRRTTB
434D_BECBMIRR
450A_GRNDMIRR
450B_GRNDMIRR
450C_GRNDMIRR
450D_GRNDMIRR
450E_GRNDMIRR
550_GRNDMIRR
636A_BECBMIRR
636B_BECBMIRR
679_MIRROSTB

Master System	OBJECT ID	REVISION	STAGE	VERSION	LAST CHANGED BY	ORGANIZATION
GMT610 06 G_Van	826mast_sys	006	X			GMT610
Panel Set: 2 schematic sheet1 $ 19	IVEDWORK/826mast_sys__006				Tuesday, October 5, 2004 8:27:16 pm	Panel Set: 2

Master System

Audio (Speakers)
826150a 002

1855A_AUBAAUBO
1855B_AUBAAUBO
1855_AUBAAUBO
1855_RTSPKR
1859A_AUBAAUBO
1859B_AUBAAUBO
1859_AUBAAUBO
1859_LTSPKR
1955A_AUBAAUBO
1955B_AUBAAUBO
1955_AUBAAUBO
1955_LTSPKR
1959A_AUBAAUBO
1959B_AUBAAUBO
1959_AUBAAUBO
1959_LTSPKR

Special Equipment Options
826260a 002

1020_BECUSSEO
1042B_BECUSSEO
1439B_BECUSSEO
1439C_BECUSSEO
150A_GRNDSSEO
150B_GRNDSSEO
1624A_LEXTSSEO
1A_CUESSEO
1_CUESSEO
230_BECUSSEO
2340_OIPCSSEO
240_BECUSSEO
441_BECUSSEO
450A_GRNDSSEO
450B_GRNDSSEO
450C_GRNDSSEO
450D_GRNDSSEO
51_CUESSEO
541_BECUSSEO
550B_GRNDSSEO
817B_OIPCSSEO

Audio (Speakers)
826150b 002

1044_AUBOSDC2
1855A_AUBAAUBO
1855B_AUBAAUBO
1855_AUBAAUBO
1855_RTSPKR
1859A_AUBAAUBO
1859B_AUBAAUBO
1859_AUBAAUBO
1859_LTSPKR
1955A_AUBAAUBO
1955B_AUBAAUBO
1955_AUBAAUBO
1955_LTSPKR
1959A_AUBAAUBO
1959B_AUBAAUBO
1959_AUBAAUBO
1959_LTSPKR
230_AUBOBECU
340B_AUBOBECU
351A_AUBOGRND
351C_AUBOGRND
658_AUBOOSTR
679_AUBOOSTR
814_AUBOOSTR

Steering Column Controls (Stal
826155a 002

111_LEXTSWIC
111_SWICTTBC
111_SWICTTBC
1414_LEXTSWIC
1415_LEXTSWIC
1788_SWICTTBC
230_LINTSWIC
28_BECUSWIC
307_SWICTTBC
350A_GRNDSWIC
350B_GRNDSWIC
397_ON
397_SMCCSWIC
477_SWICWWIP
478_SWICWWIP
739_BECUSWIC
84_SET
84_SMCCSWIC
87_GES
87_SMCCSWIC
94_SWICWWIP

Entertainment (Onstar)
826160a 002
&UE1

1127_OSTRSDC2
1158_MIBBOSTR
1798_MIBBOSTR
1941_MIBBOSTR
340A_BECUOSTR
351A_GRNDOSTR
658_AUBOOSTR
679_AUBOOSTR
814_AUBOOSTR

Master System	OBJECT ID	REVISION	STAGE	VERSION	LAST CHANGED BY	ORGANIZATION
GMT610 06 G_Van	826mast_sys	006	X	0		GMT610
Panel Set: 3 schematic sheet1 19	$IVEDWORK/826mast_sys__006				Tuesday, October 5, 2004 8:27:16 pm	Panel Set: 3